TM 11-6625-450-15

MENT OF THE ARMY TECHNICAL MANUAL

ANIZATIONAL, DS, GS, AND DEPOT AINTENANCE MANUAL INCLUDING REPAIR PARTS

BATTERY TESTERS

TS-183/U, TS-183A/U AND TS-183B/U

This copy is a reprint which includes current pages from Change 1.

JARTERS, DEPARTMENT OF THE ARMY

MAY 1967

Technical Manual
No. 11-6625-450-15

HEADQUARTERS
DEPARTMENT OF THE ARMY
Washington, D. C., *19 May 1967*

Organizational, Direct Support, General Support, and Depot Maintenance Manual Including Repair Parts BATTERY TESTERS TS-183/U, TS-183A/U AND TS-183B/U

*This manual supersedes TM 11-6625-450-25P, 21 August 1964; and together with TB 11-6625-450-10/1, 23 November 1965, supersedes TM 11-2571, 19 February 1952, including C 4, 27 February 1962, C 5, 9 October 1963, and C 6, 17 September 1964.

Technical Manual
No. 11-6625-450-15

HEADQUARTERS
DEPARTMENT OF THE ARMY
Washington, D. C., *19 May 1967*

Organizational, Direct Support, General Support, and Depot Maintenance Manual Including Repair Parts BATTERY TESTERS TS-183/U, TS-183A/U AND TS-183B/U

*This manual supersedes TM 11-6625-450-25P, 21 August 1964; and together with TB 11-6625-450-10/1, 23 November 1965, supersedes TM 11-2571, 19 February 1952, including C 4, 27 February 1962, C 5, 9 October 1963, and C 6, 17 September 1964.

Figure 1-1. Battery Tester TS-183/U or TS-183A/U.

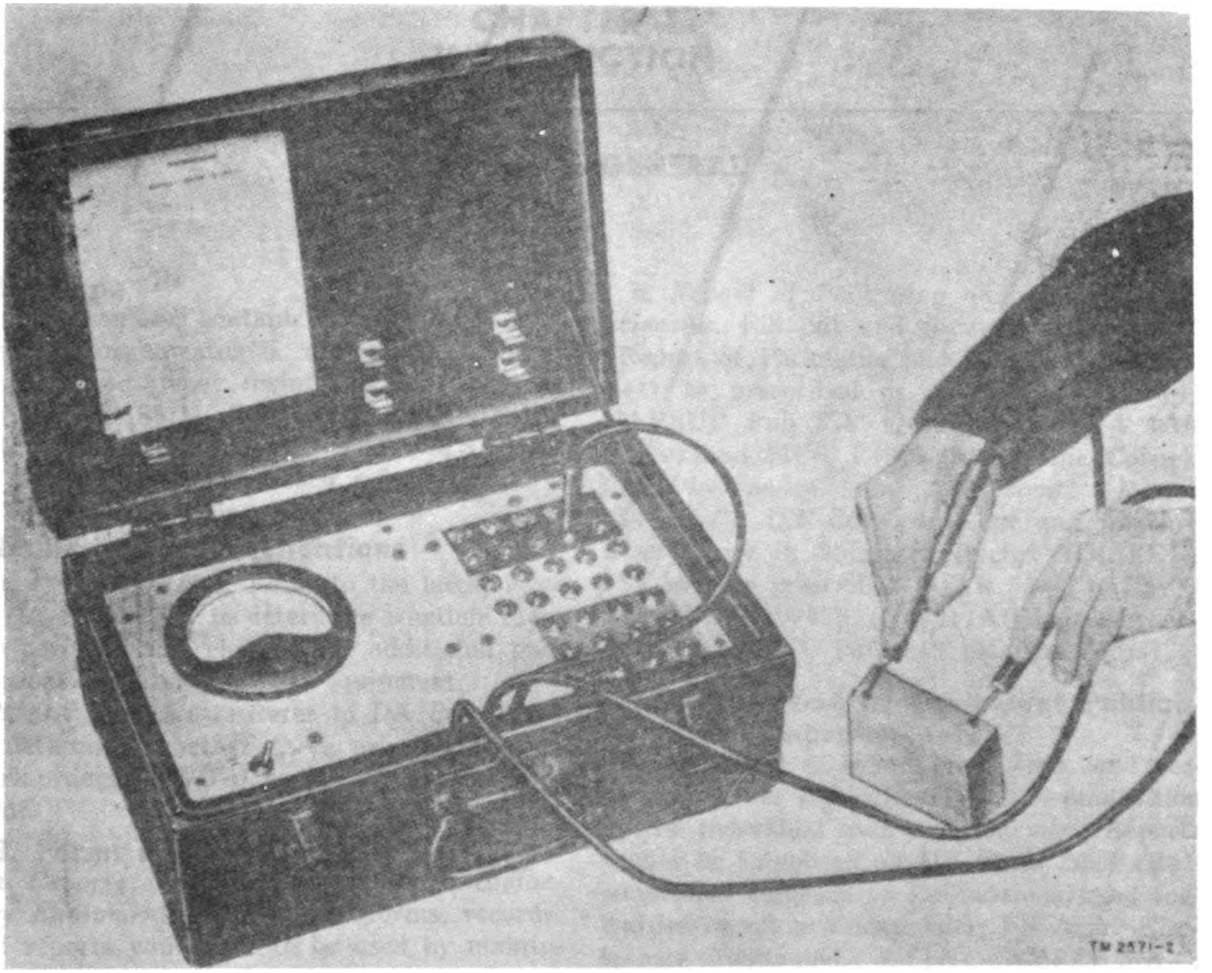

Figure 1-2. Battery Tester TS-183B/U.

CHAPTER 1
INTRODUCTION

Section I. GENERAL

1-1. Scope

a. This manual contains instructions for the operator, organizational, direct, and general support, and depot maintenance of Battery Testers TS-183/U, TS-183A/U, and TS-183 B/U. Battery Testers TS-183/U, TS-183A/U, and TS-183B/U are each referred to as a *battery tester* in this manual.

1-2. Indexes and Publications

a. DA Pam 310-4. Refer to the latest issue of DA Pam 310-4 to determine whether there are new editions, changes, or additional publications pertaining to the equipment.

b. DA Pam 310-7. Refer to DA Pam 310-7 to determine whether there are modification work orders (MWO's) pertaining to the equipment.

1-3. Forms and Records

a. Reports of Maintenance and Unsatisfactory Equipment. Maintenance forms, records, and reports which are to be used by maintenance personnel at all maintenance levels are listed in and prescribed by TM 38-750.

b. Report of Packaging and Handling Deficiencies. Fill out and forward DD Form 6 (Report of Packaging and Handling Deficiencies) as prescribed in AR 700-58 (Army)/NAVSUP Pub 378 (Navy)/AFR 71-4 (Air Force)/and MCO P4030.29 (Marine Corps).

c. Discrepancy in Shipment Report (DISREP) (SF 361). Fill out and forward Discrepancy in Shipment Report (DISREP) (SF 361) as prescribed in AR 55-38 (Army)/NAVSUP Pub 459 (Navy)/AFM 75-34 (Air Force)/and MCO P4610.19 (Marine Corps).

1-3.1. Reporting of Equipment Publication Improvements

The reporting of errors, omissions, and recommendations for improving this publication by the individual user is encouraged. Reports should be submitted on DA Form 2028 (Recommended Changes to Publications) and forwarded direct to Commander, US Army Electronics Command, ATTN: AMSEL-MA-C, Fort Monmouth, NJ 07703.

Section II. DESCRIPTION AND DATA

1-4. Purpose and Use

Battery Tester TS-183/U, TS-183/U, or TS-183B/U is used to measure the terminal voltages of dry batteries. The voltage rating of these batteries may range from 1.3 to 200 volts. With a multirange voltmeter, a set of load resistors, and a jack-switching arrangement that gives a total of 32 different load resistor combinations, a rapid and accurate check of dry batteries, under a load, can be made.

1-5. Technical Characte. istics

Type	Multirange instrument which uses a 1-milliampere dc voltmeter of the D'Arsonval type.
Voltmeter range	0 to 2 volts (black scale). 0 to 10 volts (green scale). 0 to 50 volts (yellow scale). 0 to 200 volts (red scale).
Weight	15 pounds.

1-5.1. Items Comprising an Operable Equipment

Battery Testers TS-183/U, TS-183A/U and TS-183B/U (FSN 6625-224-5174) each of the three comprises an operable equipment.

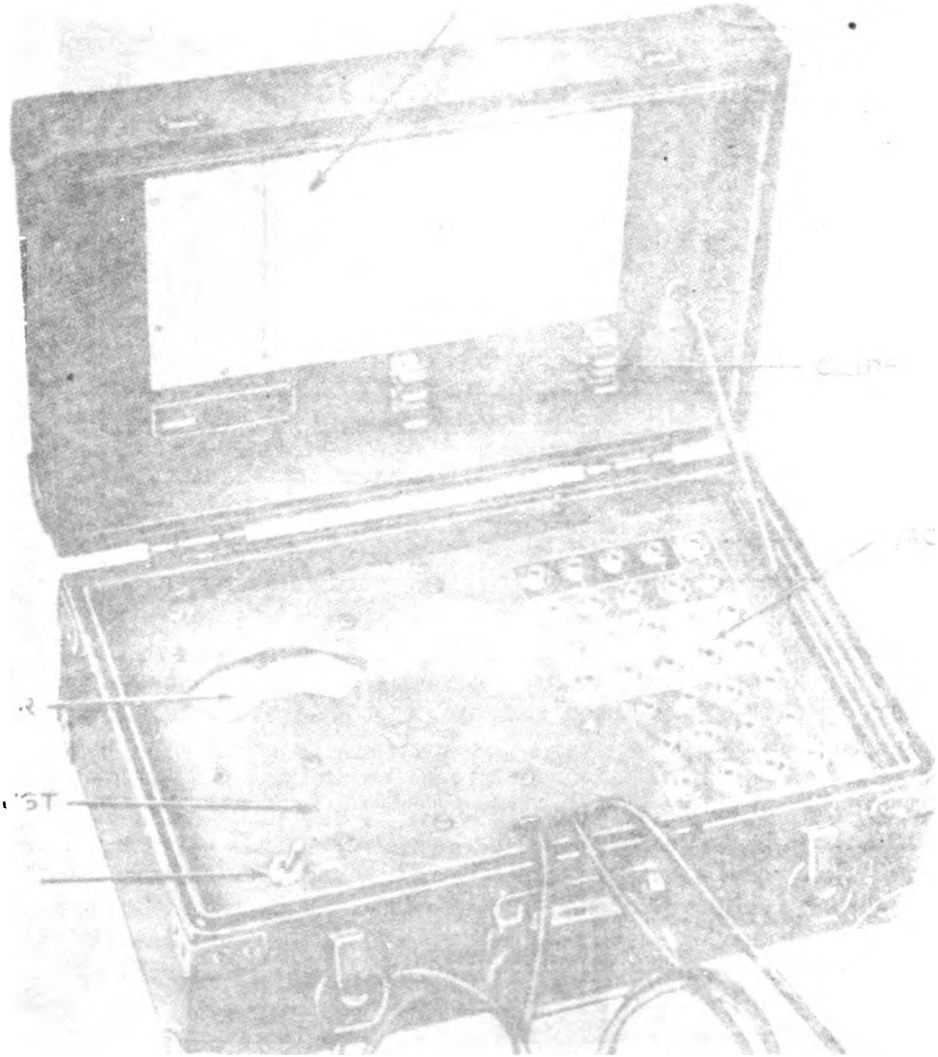

Figure 1-3. Battery Testers TS-183/U and TS-183A/U, with case open.

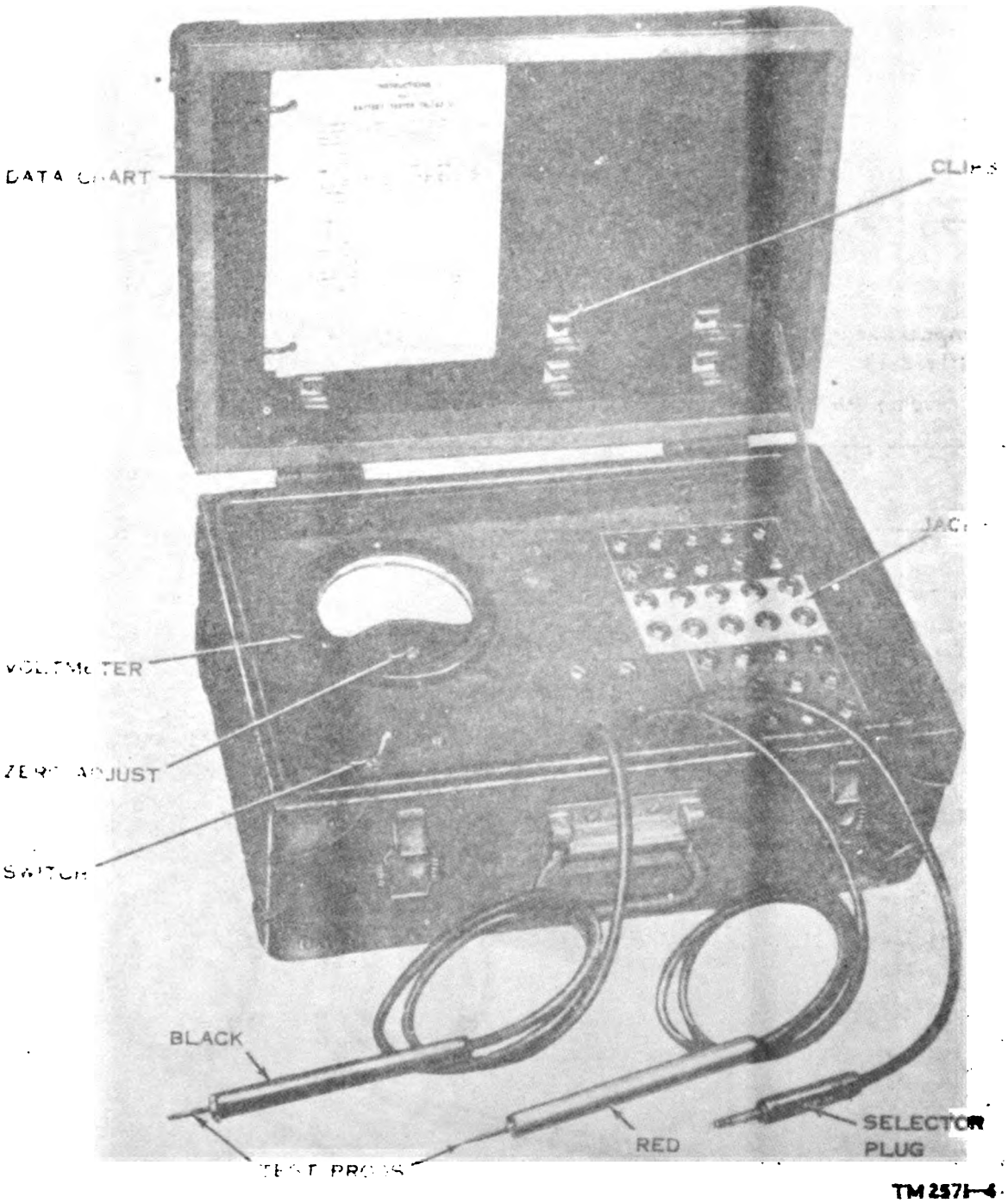

Figure 1-4. Battery Tester TS-199B, [illegible] open.

CHAPTER 2
INSTALLATION AND OPERATING INSTRUCTIONS

Section 1. SERVICE UPON RECEIPT OF EQUIPMENT

2-1. Unpacking

(fig. 2-1)

a. Packaging Data. The approximate dimensions, weight, and volume of a battery tester, packed and unpacked, are as follows:

	Dimensions (in.)			Volume (cu ft)	Weight (lb)
	Height	Width	Depth		
Unpacked	7 1/8	9 1/2	15	0.587	15
Packed	10	15	18	1.56	25

b. Unpacking.

(1) *Domestic packaging.*

(*a*) Slit the seam along the cover of the outer corrugated carton. Fold back the cover flaps, and open the moisture-vaporproof barrier.

(*b*) Slit the top seam of the water-resistant, inner corrugated carton and open it.

(*c*) Remove the technical manual.

(*d*) Remove the battery tester from the package.

(2) *Export packaging.*

(*a*) Cut and fold back the metal straps.

(*b*) With a nailpuller, remove the nails from the wooden packing case. Do not attempt to pry off the wooden cover; the equipment may become damaged.

(*c*) Open the moisture-vaporproof barrier and expose the outer corrugated carton.

(*d*) Proceed as described in (1) above.

2-2. Checking Unpacked Equipment

a. Inspect the equipment for damage incurred during shipment. If the equipment has been damaged, report the damage on DD Form 6 (para 1-3*b*).

b. Check to see that the equipment is complete as listed on the packing slip. Report all discrepancies in accordance with TM 38-750 (para 1-3*a*). Shortage of a minor assembly or part that does not affect proper functioning of the equipment should not prevent use of the equipment.

c. If the equipment has been used or reconditioned, see whether it has been changed by a modification work order (MWO). If the equipment has been modified, the MWO number will appear on the front panel near the nomenclature plate. If the equipment has been modified, check to see that any operational instruction changes which result from the modification have been entered in the equipment manual.

Note. Current MWO's applicable to the equipment are listed in DA Pam 310-4.

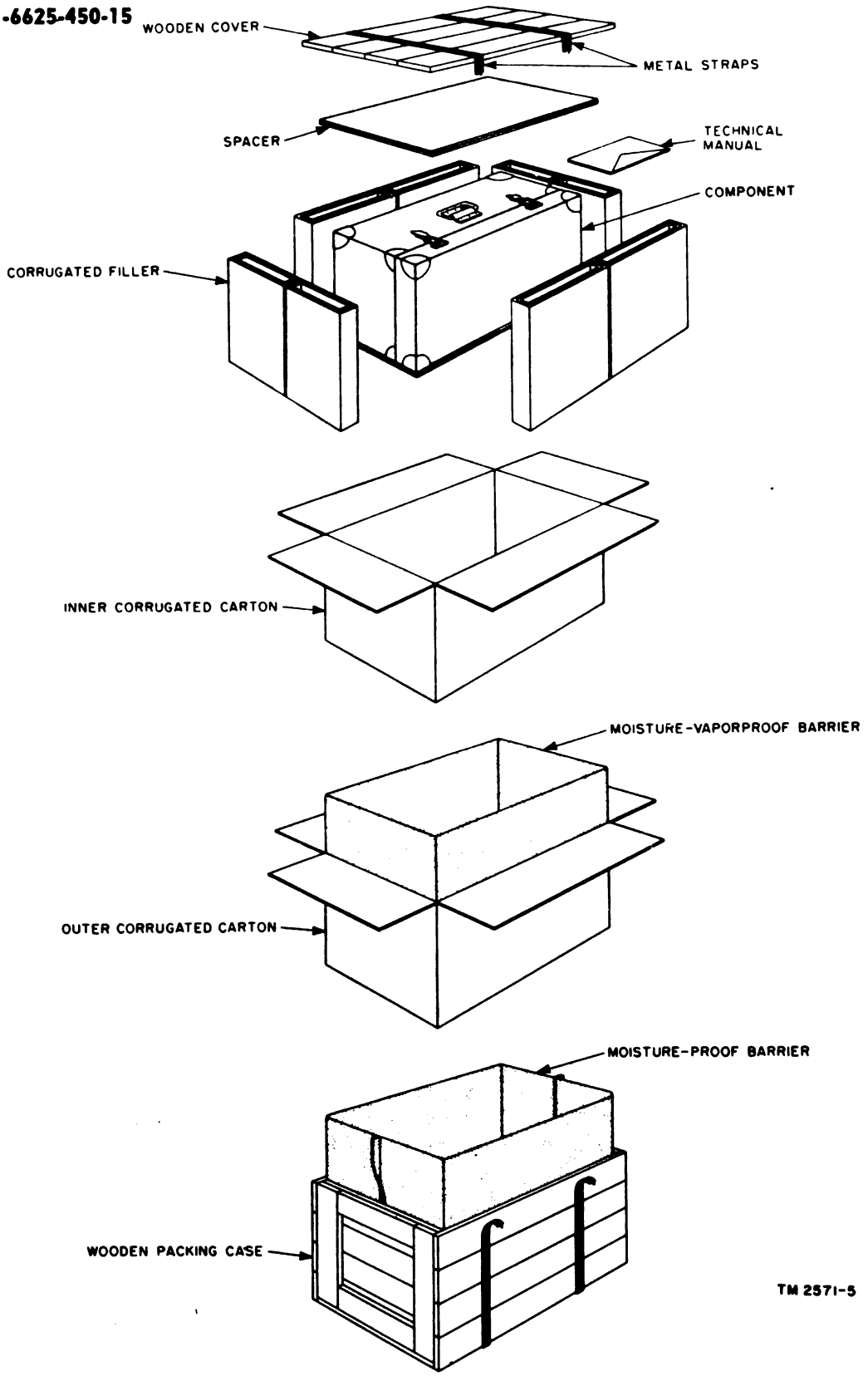

Figure 2-1. Battery tester, packaging diagram.

Section II. OPERATION

2-3. Damage from Improper Settings

Haphazard operation or use of improper jacks can damage the battery tester; therefore, knowledge of the function of the voltmeter, the NO LOAD-TEST LOAD switch, and the selector plug before operation of the battery tester is important. Refer to paragraphs 2-4, 2-5, and 2-6.

2-4. Voltmeter, Switch, and Jacks (fig. 1-3 and 1-4)

The chart below lists the voltmeter, the switch, and jacks of the battery tester and indicates their functions:

Item	Function
Voltmeter ------	Indicates the voltage value of the dry battery under test.
NO LOAD-TEST LOAD switch.	Sw pos — Function NO LOAD -- With switch depressed to NO LOAD, dry battery is tested under a no-load condition. TEST LOAD Dry battery is tested under a load condition.
Jacks (numbered 1 through 32).	Provide connection to a load for dry battery under test.

2-5. Preliminary Procedures (fig. 1-3 and 1-4)

a. Release the catches on the front of the case and open the cover.

b. Remove the test prods from their retaining clips in the cover.

c. Observe the meter pointer on the voltmeter for position; if it is not on 0, adjust it by carefully turning the zero adjust screw with a screwdriver.

2-6. Operating Procedures

a. Refer to the test data (TB 11-6625-450-10/1) attached to the inside of the cover of the battery tester, to determine the correct jack number and minimum, permissible voltage for the dry battery being tested.

Caution: **Be extremely careful to select the proper jack for the dry battery that is being tested. Use of a wrong jack may result in a damaged meter or a burned-out load resistor.**

b. When the proper jack has been determined for the dry battery being tested, insert the selector plug in the jack.

c. With the NO LOAD-TEST LOAD switch set to TEST LOAD, apply the black test prod to the negative terminal, and the red test prod to the positive terminal of the dry battery to be tested. This test should be done in approximately 5 seconds, and under no circumstances should this test exceed 15 seconds. As noted in the test data (TB 11-6625-450-10/1), when certain types of batteries are being tested, the NO LOAD-TEST LOAD switch will be set to NO LOAD.

d. Compare the indication of the voltmeter with the minimum, permissible voltage requirement given in the test data (TB 11-6625-450-10/1) to determine whether the dry battery is to be issued or rejected.

CHAPTER 3

OPERATOR'S AND ORGANIZATIONAL MAINTENANCE

3-1. Scope of Maintenance

a. The maintenance duties assigned to the operator of the battery tester are listed below, together with a reference to the paragraphs covering the specific maintenance functions. The duties assigned do not require tools or test equipment other than those issued with the equipment.

(1) Operator's daily preventive maintenance checks and services (para 3-4).

(2) Operator's weekly preventive maintenance checks and services (para 3-5).

(3) Cleaning (para 3-7).

b. The maintenance duties assigned to the organizational maintenance repairman of the battery tester are listed below, together with a reference to the paragraphs covering the specific functions. The duties assigned do not require tools or test equipment other than those issued with the equipment.

(1) Organizational monthly preventive maintenance checks and services (para 3-6).

(2) Rustproofing and painting (para 3-8).

(3) Organizational troubleshooting chart (para 3-10).

3-2. Preventive Maintenance

Preventive maintenance is the systematic care, servicing, and inspection of equipment to prevent the occurrence of trouble, reduce downtime, and assure that the equipment is serviceable.

a. Systematic Care. The procedures given in paragraphs 3-4 through 3-7 cover routine systematic care and cleaning essential to proper upkeep and operation of the equipment.

b. Preventive Maintenance Checks and Services. The preventive maintenance checks and services charts (para 3-4, 3-5, and 3-6) outline functions to be performed at specific intervals. These checks and services are designed to maintain Army equipment in a combat-serviceable condition; that is, in good general (physical) condition and in good operating condition. To assist operators and organizational repairmen to maintain combat serviceability of the equipment, the charts indicate what to check, how to check, and what the normal conditions are; the *references* column lists the paragraphs that contain detailed repair or replacement procedures. If the defect cannot be remedied by the operator, a higher category of maintenance repair is required. Records and reports of these checks and services must be made in accordance with TM 38-750.

3-3. Preventive Maintenance Checks and Services Periods

Preventive maintenance checks and service of the equipment are required daily, weekly, and monthly.

a. Paragraph 3-4 specifies the checks and services that must be done daily, and under the special conditions listed below:

(1) Before the battery tester is taken on a mission.

(2) When the battery tester is initially installed.

(3) When the battery tester is reinstalled after removal for any reason.

(4) At least once a week, if the equipment is maintained in standby condition.

b. Paragraphs 3-5 and 3-6 specify *additional* checks and services that must be performed on a weekly and monthly basis, respectively. Perform the maintenance functions indicated in the monthly preventive maintenance checks and services chart (para 3-6) once each month. A month is defined as approximately 30 calendar days of 8-hour-per-day operation. If the equipment is operated 16 hours a day, the monthly preventive maintenance checks and services should be performed at 15-day intervals. Adjustment of the maintenance interval must be made to compensate for any unusual operating conditions. Equipment maintained in a standby (ready for immediate operation) condition must have monthly preventive maintenance checks and services. Equipment in limited storage (requires service before operation) does not require monthly preventive maintenance.

3-4. Operator's Daily Preventive Maintenance Checks and Services Chart

Sequence No.	Item to be inspected	Procedure	References
1	Battery tester	Check equipment for completeness and general condition.	Appx B.
2	Exterior surfaces	Clean exterior surfaces of the equipment.	Para 3-7.
3	External receptacles	Inspect external receptacles for breakage and for firm seating.	
4	Meter glass	Inspect front panel glass window for damaged housing, broken glass, physical damage, dust, or moisture.	
5	Switch	During operation (item 6) check switch for proper mechanical action. Action must be positive, without backlash, binding, or scraping.	
6	Operation	During operation, be alert for any abnormal indications	

3-5. Operator's Weekly Preventive Maintenance Checks and Services Chart

Sequence No.	Item to be inspected	Procedure	References
1	Cables	Inspect external cables for cuts, cracked or gouged jackets, fraying, or kinks.	
2	Hardware	Inspect all exterior hardware for looseness and damage. The battery tester cover, carrying handle, hinges, and all bolts and screws must be tight and not damaged.	
3	Preservation	Inspect the equipment to determine that it is free of bare spots, rust, and corrosion. If these conditions exist, refer to a higher maintenance category for repair.	Para 3-7 and 3-8.

3-6. Organizational Monthly Preventive Maintenance Checks and Services Chart

Sequence No.	Item to be inspected	Procedure	References
1	Publications	Inspect the manual for completeness and to see if it is in usable condition. Be sure that all changes to the manual are on hand.	DA Pam 310-4.

Sequence No.	Item to be inspected	Procedure	References
2	Modification work orders	Check to see that all URGENT MWO's have been applied, and that all NORMAL MWO's have been scheduled.	DA Pam 310-4.
3	Completeness	Check the equipment for completeness and general condition.	Appx B.
4	Cleanliness	Clean the exterior surfaces of the equipment.	Para 3-7.
5	Preservation	Inspect the equipment to determine that it is free of bare spots, rust, and corrosion.	Para 3-8.
6	External receptacles	Inspect the external receptacles for breakage and for firm seating.	
7	Meter glass	Inspect the front panel glass window for damaged housing, broken glass, physical damage, dust, or moisture.	
8	Cables	Inspect the external cables for cuts, cracked or gouged jackets, fraying, or kinks.	
9	Hardware	Inspect all exterior hardware for looseness and damage. The battery tester cover, carrying handle, hinges, and all bolts and screws must be tight and not damaged.	
10	Operation	During operation, be alert for any abnormal indications.	

3-7. Cleaning

Inspect the exterior of the battery tester. The exterior surface should be free of dust, dirt, grease, and fungus.

a. Remove the dust and loose dirt with a clean, soft coth.

Warning: **Cleaning compound is flammable and its fumes are toxic. Provide adequate ventilation. *Do not* use near a flame.**

b. Remove grease, fungus, and ground-in dirt from the cases; use a cloth dampened (not wet) with Cleaning Compound (Federal stock No. 7930-395-9542).

c. Remove dust or dirt from plugs and jacks with a brush.

Caution: **Do not press on the meter face (glass) when cleaning; the meter may become damaged.**

d. Clean the front panel and meter; use a soft, clean cloth. If necessary, dampen the cloth with water; mild soap may be used for more effective cleaning.

3-8. Rustproofing and Painting

a. Rustproofing. When the finish on the battery tester has become badly scarred or damaged, rust and corrosion can be prevented by touching up the bare surface. Use No. 000 sandpaper to clean the surface down to the bare metal. Obtain a bright, smooth finish.

b. Painting. Remove the rust and corrosion from metal surfaces by lightly sanding them with fine sandpaper. Brush two thin coats of paint on the bare metal to protect it from further corrosion. Refer to the applicable cleaning and refinishing practices specified in TB SIG 364.

3-9. General Troubleshooting Information

Troubleshooting this equipment is based on the operational check (para 2-5 and 2-6). To troubleshoot the equipment, perform the operational functions of the battery tester (para 2-5 and 2-6) until an abnormal condition or result is observed. Note the abnormal condition or result and refer to the troubleshooting

chart (para 3-10). Perform the checks and corrective actions indicated in the troubleshooting chart. If the corrective measures indicated do not result in correction of the trouble, a higher maintenance category of repair is required.

3-10. Organizational Troubleshooting Chart

Item No.	Trouble symptom	Probable trouble	Checks and corrective measures
1	During operation, voltmeter does not indicate.	a. Open test prods b. Corroded or dirty test lead prods. c. Defective voltmeter	a. Repair, or replace test leads. b. Clean test lead prods. c. Refer to a higher maintenance repair category.
2	Voltmeter does not indicate within tolerance.	Defective voltmeter multiplier resistor, or resistors.	Refer to a higher maintenance repair category.
3	Voltmeter cannot be zero adjusted.	Defective voltmeter	Refer to a higher maintenance repair category.
4	During operation, voltmeter indication does not increase when NO LOAD-TEST LOAD switch is set to NO LOAD.	Defective switch	Refer to a higher maintenance repair category.

3-11. Adjustment of Jack Contact Springs

When the contact springs on the jacks require adjustment, bend them either by hand or with long-nosed pliers. Be careful when this adjustment is made; if the contact springs are bent too far they may break or be damaged.

CHAPTER 4

FUNCTIONING AND TROUBLESHOOTING

Section I. FUNCTIONING

4-1. Circuit Switching
(fig. 4-1)

Circuit switching is done between voltmeter M1 ranges and load resistors R1 through R26 by the use of selector plug P1 and 32 jacks (J1 through J32). The cord of the positive test prod is internally connected to the tip and the ring of selector plug P1. By insertion of selector plug P1 into any one of the 32 jacks, the positive terminal of the dry battery being tested is connected, first to one side of a load resistor, and then to one of the junctions between series-connected, voltmeter shunt resistors R27 through R30. The other side of the load resistor is connected to a line common to one side of all load resistors. The common line is connected through the NO LOAD TEST LOAD switch to the negative prod. When the negative prod is applied to the negative terminal of the dry battery being tested, the circuit is completed.

4-2. Internal Differences

Internal differences are given in the chart below.

Item	TS-182/U	TS-182A/U	TS-182B/U
Load resistors R1 through R26.	Sealed in an oil-filled container.	Mounted on angle brackets on the underside of the front panel.	Mounted on angle brackets on the underside of the front panel.
Voltmeter multiplier resistors R27 through R30.	Mounted external to voltmeter.	Internally mounted in hermetically sealed voltmeter.	Internally mounted in hermetically sealed voltmeter.

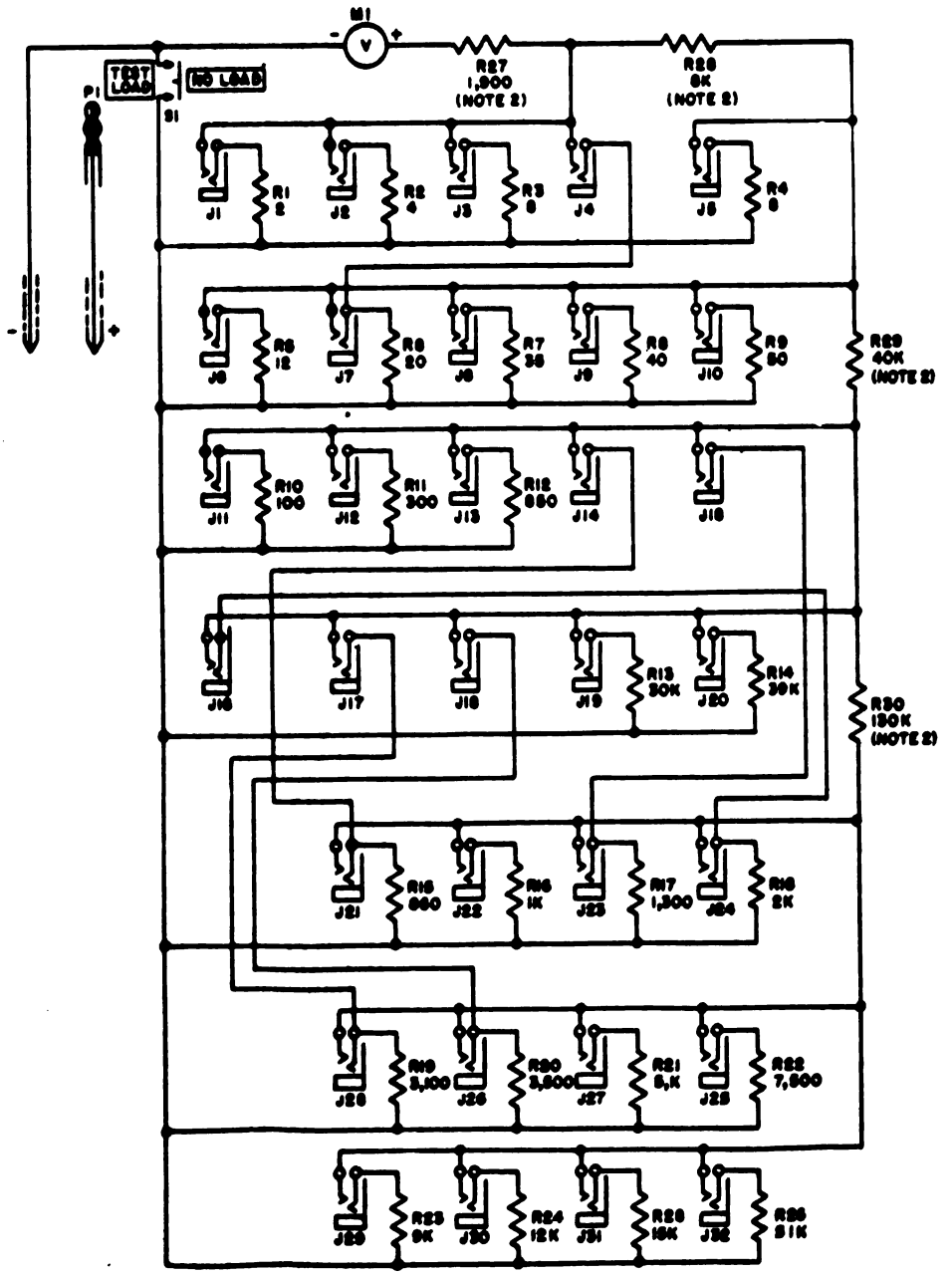

NOTES:

1. RESISTANCES ARE IN OHMS, R1 THRU R13 ARE 1% RESISTORS, R14 THRU R26 ARE 5% RESISTORS.
2. R27 THRU R30 ARE VOLTMETER M1 MULTIPLIER RESISTORS THAT ARE EXTERNALLY MOUNTED FOR TS-183/U AND INTERNALLY MOUNTED FOR TS-183A/U AND TS-183B/U.

TM2571-11

Figure 4-1. Battery Testers TS-183/U, TS-183A/U, and TS-183B/U, schematic diagram.

Section II. TROUBLESHOOTING

4-3. General Instructions

Examine the load resistors, connectors, soldered connections, and the voltmeter for defects before setting up the test equipment. If the battery tester operator's complaint is available, study it for possible clues to causes of trouble.

4-4. Organization of Troubleshooting Procedures

a. General. The first step in servicing a defective battery tester is to localize the fault. Localization means tracing the fault to a defective stage or circuit responsible for the abnormal condition. The second step is isolation. Isolation means locating a defective part or parts.

b. Localization and Isolation. The first step in tracing trouble is to localize the defective stage or circuit by one of the following methods:

(1) *Visual inspection.* The purpose of visual inspection is to locate faults without testing or measuring circuits. All meter indications or other visual signs should be observed, and an attempt made to localize the fault to a particular part.

(2) *Resistance measurements.* Use the resistance values given in the schematic diagram (fig. 4-1) and compare them with readings taken.

(3) *Operational tests.* Operational tests frequently indicate the general location of trouble. In many instances, the test will help to determine the exact nature of the fault.

(4) *Troubleshooting chart.* The troubleshooting chart (para 4-6c) lists symptoms of common troubles and gives (or references) corrective measures. Such a chart obviously cannot include *all* trouble symptoms that may occur. The repairman should use this chart as a guide to analyze symptoms that may not be listed.

(5) *Resistor color code diagram.* The color code diagram for resistors (fig. 7-1) provides pertinent resistance, voltage rating, and tolerance information.

4-5. Test Equipment Required

Multimeter TS-352B/U is required for troubleshooting, and is used for continuity tests and resistance measurements.

4-6. Localizing Troubles

a. General. Procedures for localizing and isolating troubles within the various circuits of the battery tester are given in the troubleshooting chart (*c* below). Refer to figures 4-2, 4-3, and 4-4 for component locations. Refer to the schematic diagram (fig. 4-1) to identify circuit components. Refer to wiring diagrams (fig. 7-2, 7-3, and 7-4) for point-to-point circuit wiring and connections. Depending on the nature of the operational symptoms, one or more of the localizing procedures will be necessary. When trouble has been localized to a particular circuit, use resistance measurements to isolate the trouble to a particular part.

b. Use of Chart. If previous operational checks have resulted in reference to a particular item of this chart, go directly to the referenced item. If no operational symptoms are known, proceed with an operational check until a trouble symptom appears.

c. Troubleshooting Chart.

Item No.	Trouble symptom	Probable trouble	Checks and corrective measures
1	Voltmeter fails to operate for all plug positions.	a. Broken or loose connection to tip of plug.	a. Check and correct connections.

Item No.	Trouble symptom	Probable trouble	Checks and corrective measures
		b. Defective voltmeter	b. Replace voltmeter.
2	Voltmeter fails to operate for one or more plug positions.	a. Weak jack contact spring	a. Adjust contact spring (para 3-11).
		b. Broken connection to jack	b. Check and repair defective connection.
3	All load resistors have no loading effect.	a. Broken or loose connection to ring of selector plug.	a. Check connection to selector plug.
		b. Defective switch	b. Replace switch.
		c. Broken or loose connection to switch.	c. Check connections to switch.
4	One load resistor has no loading effect.	a. Weak jack contact spring	a. Adjust contact spring (para 3-11).
		b. Broken connection to jack	b. Check connections.
		c. Defective load resistor	c. Replace resistor.

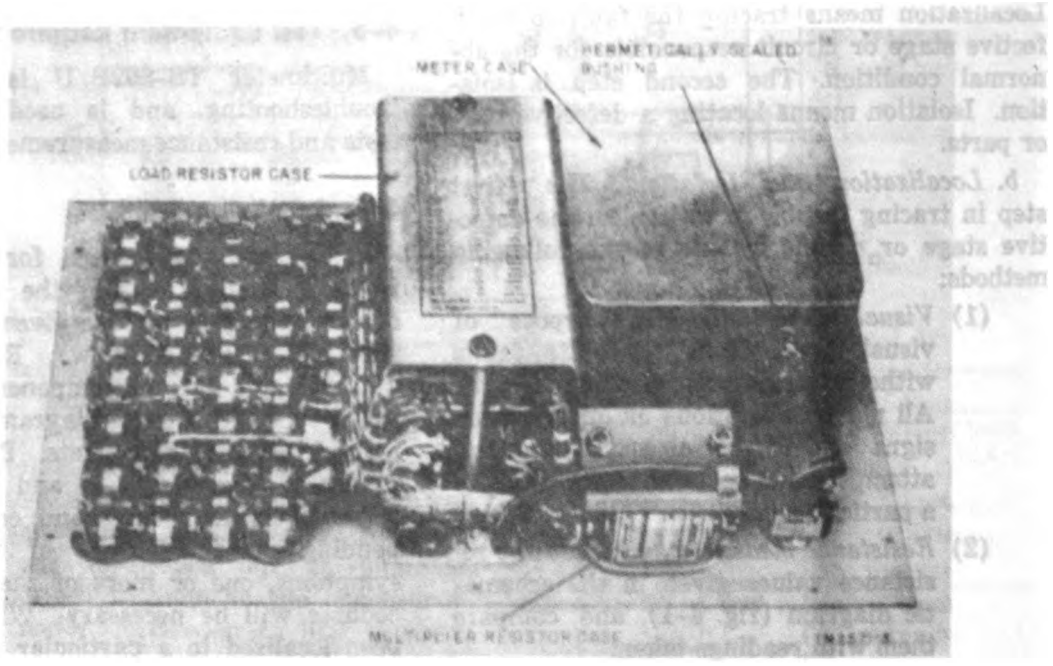

Figure 4-2. Battery Tester TS-188/U, parts location.

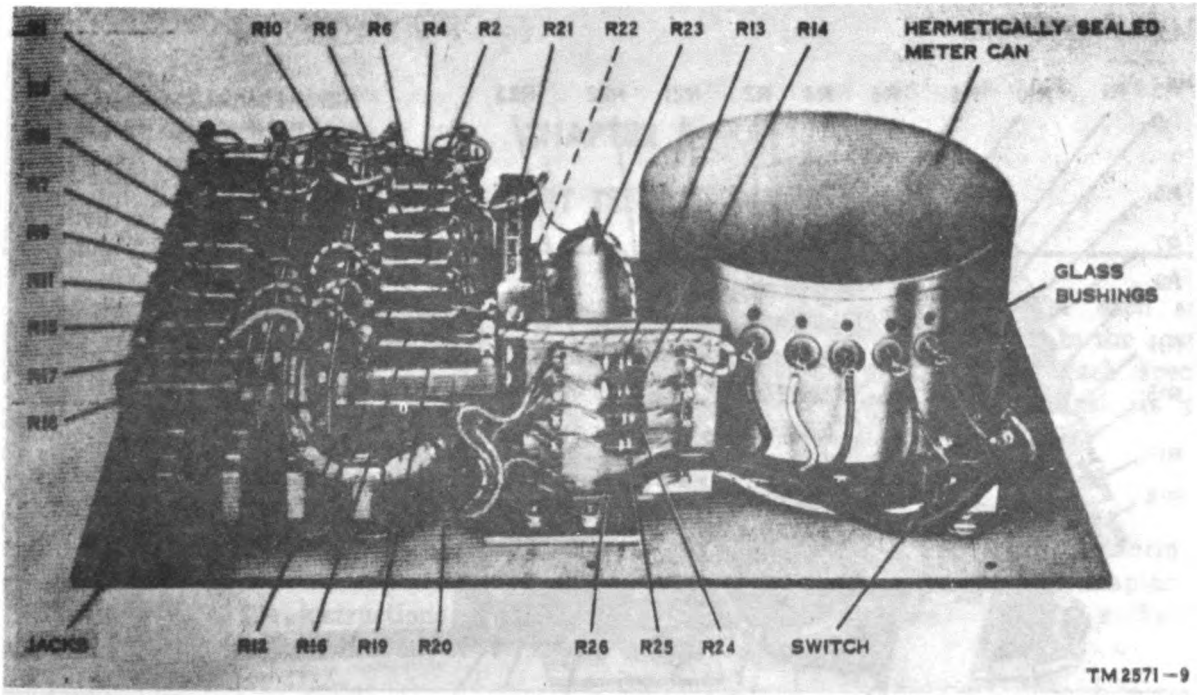

Figure 4-9. Battery Tester TS-189A/U, parts location.

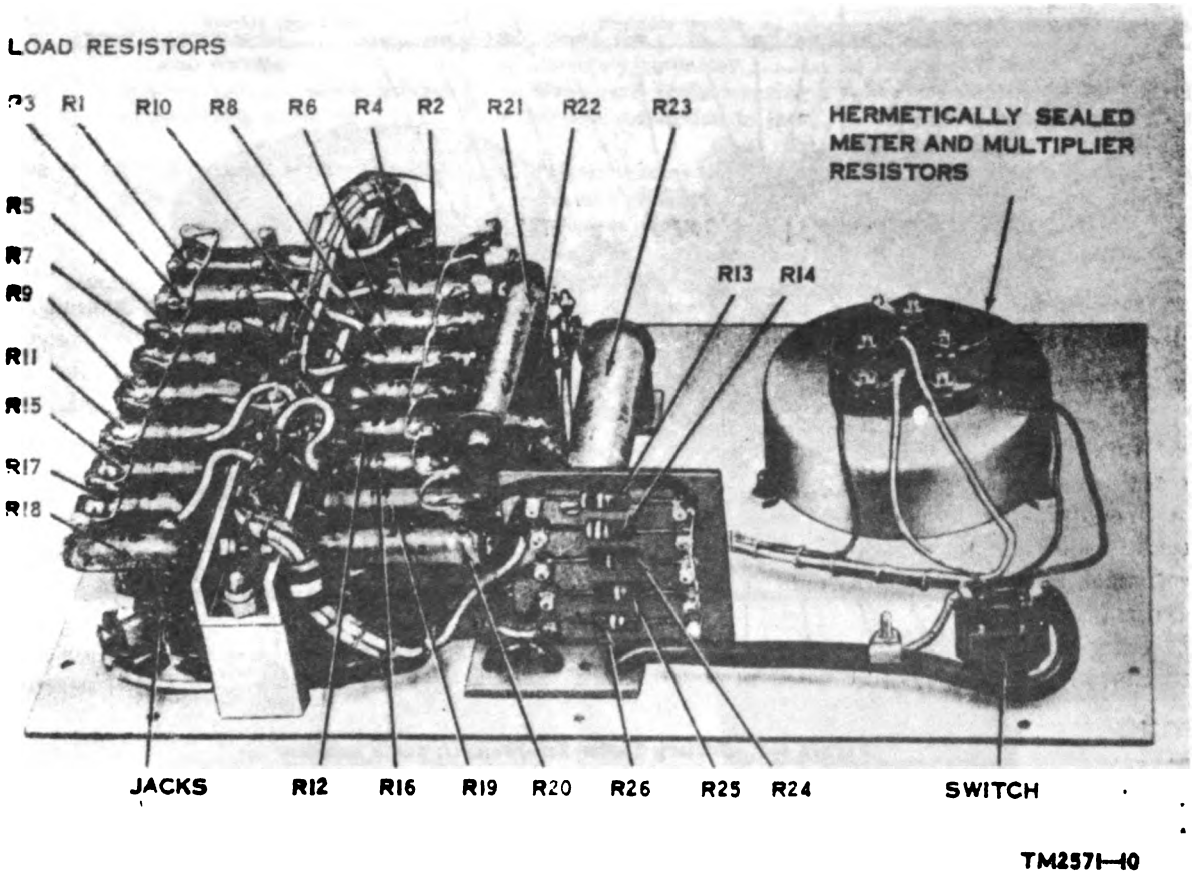

Figure 4-4. Battery Tester TS-188B/U, parts location.

CHAPTER 5

GENERAL SUPPORT TESTING PROCEDURES

5-1. General

a. Testing procedures are prepared for use by Electronics Field Maintenance Shops and Electronics Service Organizations responsible for the general support maintenance of repaired equipment. These procedures set forth specific requirements that repaired equipment *must* meet before it is returned to the using organization.

b. Comply with the instructions preceding each chart before proceeding to the chart. Perform each step in sequence. For each step, perform all the actions required in the *control settings* column; then perform each specific test procedure and verify it against its performance standard.

5-2. Test Equipment

All test equipment required to perform the testing procedures given in this chapter are listed in the chart below, and are authorized under TA 11-17.

Nomenclature	Federal stock No.	Technical manual
Meter, Test Set TS-682A/GSM-1.	6625-669-0747	TM 11-2585B
Resistance Bridge ZM-4A/U.	6625-570-5722	TM 11-2019

5-3. Physical Tests and Inspection

a. Test Equipment and Materials. None.

b. Test Connections and Conditions.

(1) No connections necessary.

(2) Remove the front panel from the case.

c. Procedures.

Step No.	Control setting		Test procedure	Performance standard
	Test equipment	Equipment under test		
1	N/A	N/A.	a. Inspect the front panel, chassis, and case for damage, missing parts, and condition of paint. *Note.* Touchup painting is recommended instead of refinishing whenever practical; screwheads, binding posts, receptacles, and other plated parts will not be painted or polished with abrasives. b. Inspect mechanical assemblies for loose or missing screws, bolts, and nuts. c. Inspect all test prods, connectors, sockets, jacks, and voltmeter for looseness, damage, or missing parts.	a. No damage evident or parts missing. External surfaces intended to be painted will not show bare metal. Panel lettering will be legible. b. Screws, bolts, and nuts will be tight and none missing. c. No loose parts or damage. No missing parts.
2	N/A.	N/A.	Operate switch.	Switch will operate properly.

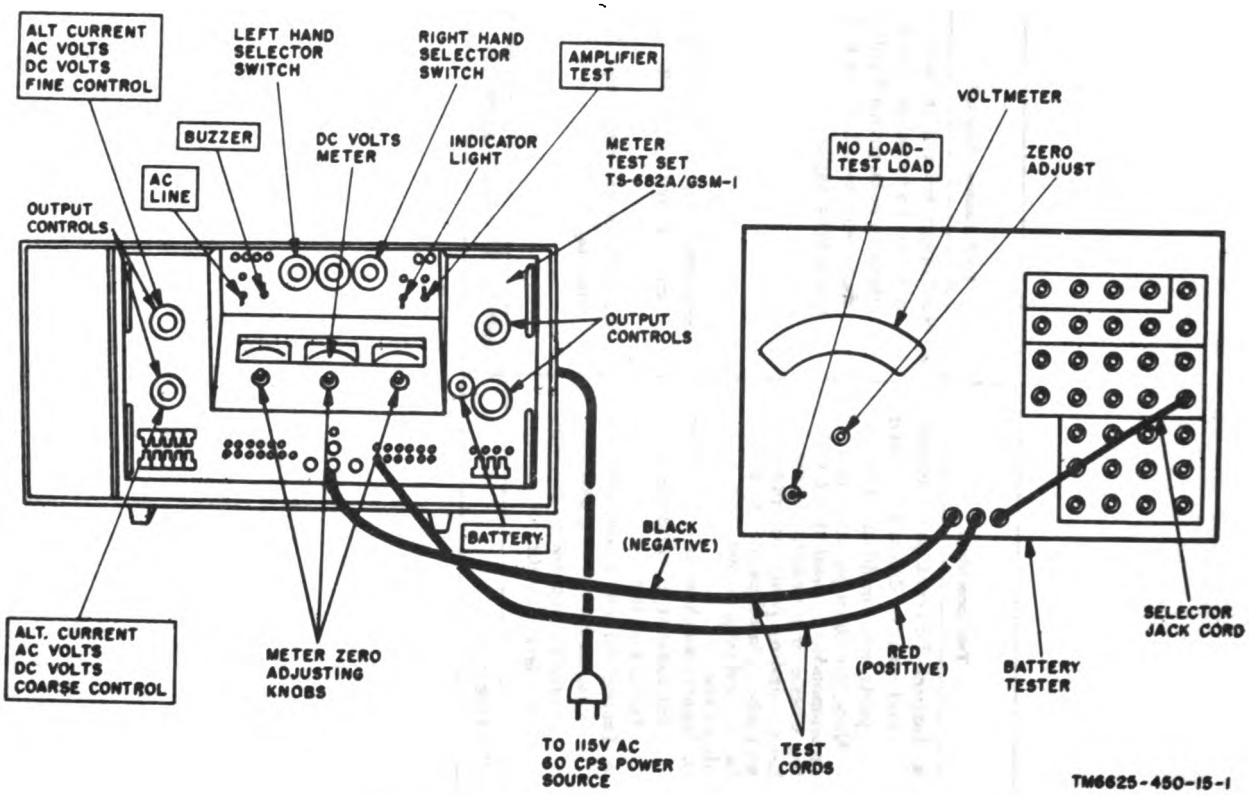

Figure 5-1. Voltmeter, test connection diagram.

5–4. Voltmeter Test

a. Test Equipment. Meter, Test Set TS–682A/GSM–1.

b. Test Connections and Conditions. Connect the equipment as shown in figure 5–1 with the black (negative) test prod of the bateery tester connected to the common jack of TS–682A/GSM–1. Instructions to connect the red (positive) test prod of the battery tester are given in *c* below. For each test given in *c* below, *be sure* that the NO LOAD-TEST LOAD switch of the battery tester is set to NO LOAD.

c. Procedures.

Step No.	Control settings: Test equipment	Control settings: Equipment under test	Test procedure	Performance standard
1	*TS–682A/GSM–1:* AC LINE: OFF. Range (S4): DCV. Range (S5): 100 MVDC to 400 VDC. Range (S6): (Any position). Set DC VOLTS COARSE and FINE CONTROLS fully counterclockwise. BATTERY: OFF. Set AC LINE switch to ON, and allow 15 minutes for warmup.	Selector plug connected to jack No. 1. NO LOAD-TEST LOAD switch to NO LOAD.	*a.* Connect red (positive) test prod of battery tester to 2V jack on TS–682A/GSM–1 and adjust DC VOLTS COARSE and FINE CONTROLS for an indication of 1 volt on TS–682A/GSM–1.	*a.* Battery tester voltmeter indicates between 0.98 and 1.02 volts.
			b. Adjust DC VOLTS COARSE and FINE CONTROLS for an indication of 1.8 volts on TS–682A/GSM–1.	*b.* Battery tester voltmeter indicates between 1.76 and 1.84 volts.
			c. Set DC VOLTS COARSE and FINE CONTROLS fully counterclockwise.	*c.* None.
			d. Connect red (positive) test prod of battery tester to 10V jack on TS–682A/GSM–1, selector plug to jack No. 5 of battery tester, and adjust DC VOLTS COARSE and FINE CONTROLS for an indication of 5 volts on TS–682A/GSM–1.	*d.* Battery tester voltmeter indicates between 4.9 and 5.1 volts.
			e. Adjust DC VOLTS COARSE and FINE CONTROLS for an indication of 9 volts on TS–682A/GSM–1.	*e.* Battery tester voltmeter indicates between 8.8 and 9.2 volts.
			f. Set DC VOLTS COARSE and FINE CONTROLS fully counterclockwise.	*f.* None
			g. Connect red (positive) test prod of battery tester to 40V jack on TS–682A/GSM–1, selector plug to jack No. 11 of battery tester, and adjust DC VOLTS COARSE and FINE CON-	*g.* Battery tester voltmeter indicates between 24.5 and 25.5 volts.

tester, and adjust DC VOLTS COARSE and FINE CON-

	MULTIPLY BY: $\frac{}{1000}$. 1000 dial: 8. 100 dial: 0. 10 dial: 0. 1 dial: 0.			
6	*ZM-4A/U:* GA: R.V.M. RES-VAR-MUR: RES. MULTIPLY BY: $\frac{1}{100}$. 1000 dial: 1. 100 dial: 2. 10 dial: 0. 1 dial: 0.	Same as step 1.	Connect selector plug to jack No. 6, and adjust the dials of ZM-4A/U to measure the resistance at jack No. 6.	Resistance indicated at jack No. 6 is between 11.8 and 12.8 ohms.
7	*ZM-4A/U:* GA: R.V.M. RES-VAR-MUR: RES. MULTIPLY BY: $\frac{1}{100}$. 1000 dial: 2. 100 dial: 0. 10 dial: 0. 1 dial: 0.	Same as step 1.	Connect selector plug to jack No. 7, and adjust the dials of ZM-4A/U to measure the resistance at jack No. 7.	Resistance indicated at jack No. 7 is between 19.4 and 20.2 ohms.
8	*ZM-4A/U:* GA: R.V.M. RES-VAR-MUR: RES. MULTIPLY BY: $\frac{1}{100}$. 1000 dial: 3. 100 dial: 5. 10 dial: 0. 1 dial: 0.	Same as step 1.	Connect selector plug to jack No. 8, and adjust the dials of ZM-4A/U to measure the resistance at jack No. 8.	Resistance indicated at jack No. 8 is between 34.4 and 35.4 ohms.
9	*ZM-4A/U:* GA: R.V.M. RES-VAR-MUR: RES. MULTIPLY BY: $\frac{1}{100}$. 1000 dial: 4. 100 dial: 0. 10 dial: 0. 1 dial: 0.	Same as step 1.	Connect selector plug to jack No. 9, and adjust the dials of ZM-4A/U to measure the resistance at jack No. 9.	Resistance indicated at jack No. 9 is between 39.4 and 40.3 ohms.
10	*ZM-4A/U:* GA: R.V.M. RES-VAR-MUR: RES. MULTIPLY BY: $\frac{1}{100}$. 1000 dial: 5. 100 dial: 0. 10 dial: 0. 1 dial: 0.	Same as step 1.	Connect selector plug to jack No. 10, and adjust the dials of ZM-4A/U to measure the resistance at jack No. 10.	Resistance indicated at jack No. 10 is between 49.1 and 50.3 ohms.

28	*ZM-4A/U:* GA: R.V.M. RES-VAR-MUR: RES. MULTIPLY BY: $\frac{1}{1.}$ 1000 dial: 7. 100 dial: 2. 10 dial: 3. 1 dial: 0.	Same as step 1.	Connect selector plug to jack No. 28, and adjust the dials of ZM-4A/U to measure the resistance at jack No. 28.	Resistance indicated at jack No. 28 is between 6,968 and 7,592 ohms.
29	*ZM-4A/U:* GA: R.V.M. RES-VAR-MUR: RES. MULTIPLY BY: $\frac{1}{1.}$ 1000 dial: 8. 100 dial: 6. 10 dial: 4 1 dial: 8.	Same as step 1.	Connect selector plug to jack No. 29, and adjust the dials of ZM-4A/U to measure the resistance at jack No. 29.	Resistance indicated at jack No. 29 is between 8,215 and 9,061 ohms.
30	*ZM-4A/U:* GA: R.V.M. RES-VAR-MUR; RES. MULTIPLY BY: $\frac{10}{1.}$ 1000 dial: 1. 100 dial: 1. 10 dial: 3. 1 dial: 2.	Same as step 1.	Connect selector plug to jack No. 30, and adjust the dials of ZM-4A/U to measure the resistance at jack No. 30.	Resistance indicated at jack No. 30 is between 10,754 and 11,886 ohms.
31	*ZM-4A/U:* GA: R.V.M. RES-VAR-MUR: RES. MULTIPLY BY: $\frac{10}{1.}$ 1000 dial: 1. 100 dial: 3. 10 dial: 9. 1 dial: 9.	Same as step 1.	Connect selector plug to jack No. 31, and adjust the dials of ZM-4A/U to measure the resistance at jack No. 31.	Resistance indicated at jack No. 31 is between 13,295 and 14,695 ohms.
32	*ZM-4A/U:* GA: R.V.M. RES-VAR-MUR: RES. MULTIPLY BY: 1000 dial: 4. 100 dial: 0. 10 dial: 0. 1 dial: 0.	Same as step 1.	a. Connect selector plug to jack No. 32, and adjust the dials of ZM-4A/U to measure the resistance at jack No. 32. b. Disconnect the equipment.	a. Resistance indicated at jack No. 32 is between 38,000 and 42,000 ohms. b. None.

5-6. Test Data Summary

A summary of the test data is given below:

	TEST data performance standard
1. VOLTMETER:	
a. 0- to 2-volt range:	
(1) 1-volt standard	Between 0.98 and 1.02 volts.
(2) 1.8-volt standard	Between 1.76 and 1.84 volts.
b. 0- to 10-volt range:	
(1) 5-volt standard	Between 4.9 and 5.1 volts.
(2) 9-volt standard	Between 8.8 and 9.2 volts.
c. 0- to 50-volt range:	
(1) 25-volt standard	Between 24.5 and 25.5 volts.
(2) 45-volt standard	Between 44.1 and 45.9 volts.
d. 0- to 200-volt range:	
(1) 100-volt standard	Between 98 and 102 volts.
(2) 180-volt standard	Between 176 and 184 volts.
2. RESISTANCE OF JACKS J1-J32:	
J1	Between 1.93 and 2.09 ohms
J2	Between 3.95 and 4.1 ohns.
J3	Between 5.92 and 6.09 ohms.
J4	Between 19.3 and 20.1 ohms.
J5	Between 7.85 and 8.1 ohms.
J6	Between 11.8 and 12.8 ohms.
J7	Between 19.4 and 20.2 ohms.
J8	Between 34.4 and 35.4 ohms.
J9	Between 39.4 and 40.3 ohms.
J10	Between 49.1 and 50.3 ohms.
J11	Between 98.5 and 101 ohms.
J12	Between 295.2 and 301.5 ohms.
J13	Between 538 and 550 ohms.
J14	Between Between 802 and 889 ohms.
J15	Between 1,203 and 1.331 ohms.
J16	Between 1,826 and 2,020 ohms.
J17	Between 2,773 and 3,065 ohms.
J18	Between 3,107 and 3,435 ohms.
J19	Between 17,812 and 19,688 ohms.
J20	Between 21,109 and 23,331 ohms.
J21	Between 813 and 899 ohms.
J22	Between 945 and 1,045 ohms.
J23	Between 1,227 and 1,357 ohms.
J24	Between 1,881 and 2,079 ohms.
J25	Between 2,900 and 3,206 ohms.
J26	Between 3,278 and 3,612 ohms.
J27	Between 4,635 and 5,123 ohms.
J28	Between 6,968 and 7,592 ohms.
J29	Between 8,215 and 9,081 ohms.
J30	Between 10,754 and 11,886 ohms.
J31	Between 13,295 and 14,695 ohms.
J32	Between 38,000 and 42,000 ohms.

CHAPTER 6

DEPOT OVERHAUL STANDARDS

6-1. Applicability of Depot Overhaul Standards

The tests outlined in this chapter are designed to measure the performance capability of a repaired equipment. Equipment that is to be returned to stock should meet the standards given in these tests.

6-2. Applicable References

a. Repair Standards. Applicable procedures of the depots which perform these tests and the general standards for repaired electronic equipment given in TB SIG 355-1, TB SIG 355-2, and TB SIG 355-3 form a part of the requirements for testing this equipment.

b. Modification Work Orders. Perform all modification work orders applicable to this equipment before making the tests specified. DA Pam 310-4 lists all available MWO's.

6-3. Test Facilities Required

Items required for depot testing are as follows:

Nomenclature	Technical manual	Common name
Meter, Test Set TS-352A/GSM-1.	TM 11-5525B	Test set.
Resistance Bridge ZM-4A/U.	TM 11-5019	Resistance bridge.

6-4. Tests

The depot inspection standards test procedures are the same as those for general support (para 5-4 and 5-5). Equipment that meets the performance standards stated in these tests will furnish satisfactory operation equivalent to that of new equipment.

CHAPTER 7

SHIPMENT, LIMITED STORAGE, AND DEMOLITION TO PREVENT ENEMY USE

7-1. Repacking for Shipment and Limited Storage

a. The original packing materials may be used to repack the battery tester. Repack the equipment as shown in figure 2-1.

b. Pack the battery tester securely to prevent damage during transit or limited storage. Use sufficient wadding. Protect the equipment from rain and snow.

7-2. Authority for Demolition

The demolition procedures given in paragraph 7-3 will be used to prevent the enemy from using or salvaging this equipment. Demolition of the equipment will be accomplished only upon the order of the commander.

7-3. Methods of Destruction

The tactical situation and time available will determine the method to be used when destruction of equipment is ordered. In most cases, it is preferable to completely demolish some portions of the equipment rather than partially destroy all the equipment components.

a. Smash. Smash the case, the meter, and the control. Smash the internal components.

b. Cut. Cut the wiring of the battery tester.

Warning: Be extremely careful with explosives and incendiary devices. Use these items only when the need is urgent.

c. Burn. Burn the technical manuals first. Burn as much of the equipment as is flammable.

d. Disposal. Bury or scatter destroyed parts.

COLOR CODE MARKING FOR MILITARY STANDARD RESISTORS

COMPOSITION-TYPE RESISTORS

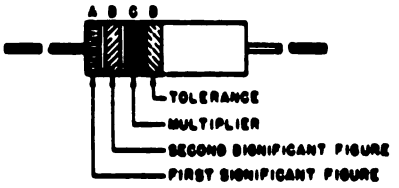

BAND A— Equal Width Band Signifies Composition-Type

WIREWOUND-TYPE RESISTORS

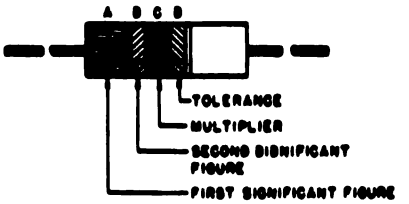

BAND A— Double Width Signifies Wire-wound Resistor

COLOR CODE TABLE

BAND A		BAND B		BAND C		BAND D*	
COLOR	FIRST SIGNIFICANT FIGURE	COLOR	SECOND SIGNIFICANT FIGURE	COLOR	MULTIPLIER	COLOR	RESISTANCE TOLERANCE (PERCENT)
BLACK	0	BLACK	0	BLACK	1		
BROWN	1	BROWN	1	BROWN	10		
RED	2	RED	2	RED	100		
ORANGE	3	ORANGE	3	ORANGE	1,000		
YELLOW	4	YELLOW	4	YELLOW	10,000	SILVER	± 10
GREEN	5	GREEN	5	GREEN	100,000	GOLD	± 5
BLUE	6	BLUE	6	BLUE	1,000,000		
PURPLE (VIOLET)	7	PURPLE (VIOLET)	7				
GRAY	8	GRAY	8	SILVER	0.01		
WHITE	9	WHITE	9	GOLD	0.1		

EXAMPLES OF COLOR CODING

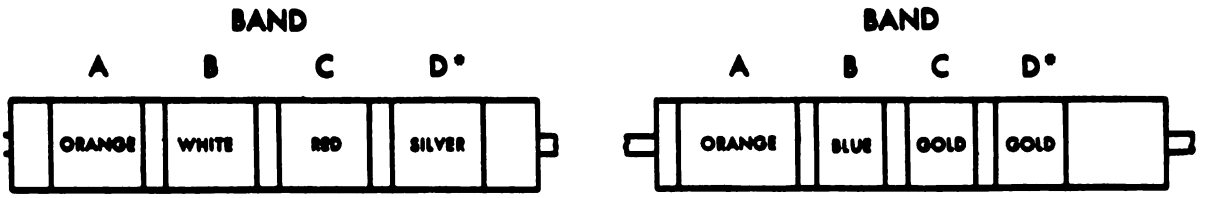

NOMINAL RESISTANCE	3,900 Ohms	3.6 Ohms
RESISTANCE TOLERANCE	± 10 percent	± 5 percent

STD-R2

*If Band D is omitted, the resistor tolerance is ±20%, and the resistor is not Mil-Std.

Figure 7-1. MIL-STD resistor color code markings.

APPENDIX A

REFERENCES

AR 700-58	Report of Damaged or Improper Shipment.
DA Pam 310-4	Index of Technical Manuals, Technical Bulletins, Supply Manuals (types 7, 8, and 9), Supply Bulletins, Lubrication Orders, and Modification Work Orders.
SB 11-6	Dry Battery Supply Data.
TA 11-17	Army Field Maintenance Shops.
TB 11-6625-450-10/1	Test Data for Battery Testers TS-183/U, TS-183A/U, and TS-183B/U.
TB SIG 355-1	Depot Inspection Standard for Repaired Signal Equipment.
TB SIG 355-2	Depot Inspection Standard for Refinishing Repaired Signal Equipment.
TB SIG 355-3	Depot Inspection Standard for Moisture and Fungus Resistant Treatment.
TB SIG 364	Field Instructions for Painting and Preserving Electronics Command Equipment.
TM 11-2019	Tests Sets I-49, I-49-A and I-49-B and Resistance Bridges ZM-4A/U and ZM-4B/U.
TM 11-2535B	Meter Test Set TS-682A/GSM-1.
TM 11-5102	Resistors, Decade ZM-16/U, ZM-16A/U, and ZM-16B/U.
TM 11-6625-203-12	Operator and Organizational Maintenance Manual, Multimeter AN/URM-105, Including Multimeter ME-77/U.
TM 11-6625-366-15	Organizational, DS, GS, and Depot Maintenance Manual, Multimeter TS-352B/U.
TM 38-750	Army Equipment Record Procedures.

APPENDIX C

MAINTENANCE ALLOCATION

Section I. INTRODUCTION

C-1. General

This appendix provides a summary of the maintenance operations covered in the equipment literature for Battery Testers TS-188/U, TS-188A/U, and TS-188B/U. It authorized categories of maintenance for specific maintenance functions on repairable items and components and the tools and equipment required to perform each function. This appendix may be used as an aid in planning maintenance operations.

C-2. Explanation of Format for Maintenance Allocation Chart

a. Group Number. Not used.

b. Component Assembly Nomenclature. This column lists the item names of component units, assemblies, subassemblies, and modules on which maintenance is authorized.

c. Maintenance Function. This column indicates the maintenance category at which performance of the specific maintenance function is authorized. Authorization to perform a function at any category also includes authorization to perform that function at higher categories. The codes used represent the various maintenance categories as follows:

Codes	Maintenance category
C	Operator/crew
O	Organizational maintenance
F	Direct support maintenance
H	General support maintenance
D	Depot maintenance

d. Tools and Equipment. The numbers appearing in this column refer to specific tools and equipment which are identified by these numbers in section III.

e. Remarks. Self explanatory.

C-3. Explanation of Format for Tool and Test Equipment Requirements

The columns in the tool and test equipment requirements chart are as follows:

a. Tools and Equipment. The numbers in this column coincide with the numbers used in the tools and equipment column of the MAC. The numbers indicate the applicable tool for the maintenance function.

b. Maintenance Category. The codes in this column indicate the maintenance category normally allocated the facility.

c. Nomenclature. This column lists tools, test, and maintenance equipment required to perform the maintenance functions.

d. Federal Stock Number. This column lists the Federal stock number.

e. Tool Number. Not used.

MAINTENANCE ALLOCATION CHART

GROUP NUMBER	COMPONENT ASSEMBLY NOMENCLATURE	MAINTENANCE FUNCTIONS											TOOLS AND EQUIPMENT	REMARKS
		INSPECT	TEST	SERVICE	ADJUST	ALIGN	CALIBRATE	INSTALL	REPLACE	REPAIR	OVERHAUL	REBUILD		
	BATTERY TESTER TS-183A/U AND TS-183B/U*	C												Inspects for defects and general appearance.
				C									5	Cleans exterior
					C								5	Adjustment to "0"
			C											Performs operational test
		O											5	Inspects for loose connections, cracked and worn insulation and load resistors for signs of over heating
				O									5	Cleans interior
			O										1,2	Troubleshooting and comprehensive testing
					O								5	Adjust jack springs
									O				5	Repairs by replacing easily removable parts
			H										2,3,4	Test for performance after repairing
										H			2,3,4,5	Repair as required
											D		2,3,4,5	

*Battery Tester TS-1[illegible] will not be maintained, replace as a complete unit.

SECTION III. TOOL AND TEST EQUIPMENT REQUIREMENTS

TOOL AND TEST EQUIPMENT REQUIREMENTS

TOOLS AND EQUIPMENT	MAINTENANCE CATEGORY	NOMENCLATURE	FEDERAL STOCK NUMBER	TOOL NUMBER
		TS-183/U, TS-183A/U, TS-183B/U (continued)		
1	O	MULTIMETER AN/USM-105	6625-581-2036	
2	H,D	MULTIMETER TS-352B/U	6625-242-5023	
3	H,D	RESISTANCE BRIDGE ZM-4/U	6625-500-0937	
4	H,D	TEST SET, ELECTRICAL METER TS-682/GSM-1	6625-669-0747	
5	O,H,D	TOOL KIT, ELECTRONIC EQUIPMENT TK-105/G	5180-610-8177	

APPENDIX D

ORGANIZATIONAL, DS, GS, AND DEPOT MAINTENANCE REPAIR PARTS

Section I. INTRODUCTION

D-1. General

This appendix contains a list of repair parts required for the performance of organizational maintenance and a list covering the corresponding requirements for general support, and depot maintenance for Battery Testers TS-183/U, TS-183A/U and TS-183B/U.

Note. No special tools, test, and support equipment are required.

D-2. Explanation of Sections

This repair parts list is divided into three principal parts:

a. Repair Parts for Organizational Maintenance, Section II. Repair parts authorized for organizational maintenance is included in this section.

b. Repair Parts, DS, GS, and Depot Maintenance, Section III. This chart lists repair parts authorized for maintenance performance at general support and depot categories. No parts authorized for stockage at direct support.

c. Federal Stock Number Index, Section IV. This is a cross-reference index of Federal stock numbers to illustrations by figure and item number.

D-3. Explanation of Columns

An explanation of the columns in sections II and III is given below.

a. Source, Maintenance, and Recoverability Codes, Column 1, Sections II and III.

(1) *Source code, column 1a.* The selection status and source for the listed item is noted here. The source code and its explanation are as follows:

Code	Explanation
P	applies to repair parts that are stocked in or supplied from GSA/DSA, or Army supply system, and authorized for use at indicated maintenance categories.

(2) *Maintenance code, column 1b.* The lowest category of maintenance authorized to install the listed item is noted here.

Code	Explanation
O	Organizational maintenance
H	General support maintenance

(3) *Recoverability code, column 1c.* Not used.

Note. When no code is indicated in the recoverability column, the part will be considered expendable.

b. Federal Stock Number, Column 2, Sections II and III. The Federal stock number for the item is indicated in this column.

c. Description, Column 3, Sections II and III. The model designator, Federal item name, and a part number are included in this column. The designator (*) indicates the different models of the end equipment. The indenture code column is not used.

d. Unit of Issue, Column 4, Sections II and III. The unit used as a basis of issue (e.g. ea, pr, ft, yd, etc) is noted in this column.

e. Quantity Incorporated in Unit Pack, Column 5, Sections II and III. Not used.

f. Quantity Incorporated in Unit, Column 6, Sections II and III. The quantity of repair parts in an assembly is given in this column.

g. Maintenance Allowance, Column 7, Sections II and III.

(1) The allowance columns are divided into subcolumns. The total quantity of items authorized for the number of equipments supported is indicated in each subcolumn opposite the first appearance of each item. Items authorized for use as required but not for initial stockage are identified with an asterisk (*) in the allowance column.

(2) Subsequent changes to organizational allowances will be limited as follows: No change in the range of items is authorized. If additional items are considered necessary, recommendation should be forwarded to Commanding General, U. S. Army Electronics Command, ATTN: AMSEL-MN-NMP-TB, Fort Monmouth, N. J., 07703, for exception or revision to the allowance list. Revisions to the range of items authorized will be made by the USA ECOM National Maintenance Point based upon engineering experience, demand data, on TAERS information.

(4) The quantitative allowances for GS category of maintenance will represent initial stockage for a 30-day period for the number of equipments supported.

h. One-Year Allowances Per 100 Equipments/Contingency Planning Purposes, Column 8, Section III. Opposite the first appearance of each item, the total quantity required for distribution and contingency planning purposes is indicated. The range of items indicates total quantities of all authorized items required to provide for adequate support of 100 equipments for 1 year.

i. Illustration, Column 8, Section II and Column 10, Section III.

(1) *Figure number, column 8a and 10a.* The number of the illustration in which the item is shown, is indicated in this column.

(2) *Item or symbol number, column 8b and 10b.* The callout number used to reference the item in the illustration is indicated in this column.

j. Depot Maintenance Allowance Per 100 Equipments, Column 9, Section III. This column indicates the total quantity of each item authorized depot maintenance for 100 equipments.

D-4. Location of Repair Parts

a. When the Federal stock number is unknown, follow the procedures given in (1) through (4) below.

(1) Use the table of contents to locate the appropriate appendix of the repair parts list.

(2) If the item or symbol number is available, locate the item by scrutiny of column 8*b* and 10*b* of the repair parts list.

(3) If the item, symbol, and figure number is not known, check the description column (column 3) in the repair parts list to locate the part.

(4) Locate the applicable illustration in this manual and note the figure number and item number. Use the repair parts listing and locate the figure number and item number as noted on the illustration.

b. When the Federal stock number is known, use the repair part listing to find the part and the figure and item number as noted in the Federal stock number index.

SECTION II. REPAIR PARTS FOR ORGANIZATIONAL MAINTENANCE

(1) SOURCE CD (a)	(1) MAINT. CD (b)	(1) REC. CODE (c)	REPAIR PARTS FOR ORGANIZATIONAL MAINTENANCE (2) FEDERAL STOCK NUMBER	MODEL 1	MODEL 2	MODEL 3	MODEL 4	MODEL 5	MODEL 6	(3) DESCRIPTION	(4) UNIT OF ISSUE	(5) QTY INC IN UNPK	(6) QTY INC IN UNIT	(7) IS DAY ORG. MAINT. ALW. (a) 1-5	(b) 6-20	(c) 21-50	(d) 51-100	(8) ILLUSTRATIONS (a) FIGURE NUMBER	(b) ITEM OR SYMBOL NUMBER
			6625-224-5174							BATTERY TESTERS TS-183/U, TS-183A/U AND TS-183B/U: For checking terminal voltages of dry batteries; uses a multirange voltmeter, a set of load resistors, a set of multiplier resistors and a jack-switching arrangement that gives a total of 32 different load resistor combinations. NOTE: Battery tester TS-183/U will be replaced as a complete unit. No maintenance parts are authorized and therefore an identification table of parts for this unit is not included in this RPSTL. (This item is nonexpendable) NOTE: Model column 1 refers to TS-183A/U; column 2 refers to TS-183B/U								1-1 1-2	
P	O		6625-194-2986	*	*					PROD, TEST: Black; SO-B-86017-1	ea		1	*	*	*	*	1-3 1-4	
P	O		6625-194-2985	*	*					PROD, TEST: Red; SO-B-86017-2	ea		1	*	*	*	*	1-3 1-4	

(1) SOURCE CD (a)	MAINT. CD (b)	REC. CODE (c)	REPAIR PARTS FOR DIRECT SUPPORT, GENERAL SUPPORT, AND DEPOT MAINTENANCE (2) FEDERAL STOCK NUMBER	MODEL 1	MODEL 2	MODEL 3	MODEL 4	MODEL 5	MODEL 6	IND CD	(3) DESCRIPTION	(4) UNIT OF ISSUE	(5) QTY INC IN UN PK	(6) QTY INC IN UNIT	(7) 30 DAY MAINT. ALW. DS (a) 1-20	DS (d) 21-50	DS (e) 51-100	GS (a) 1-20	GS (d) 21-50	GS (e) 51-100	(8) 1 YR. ALW. PER 100 EQUIP. CNTGCY PK	(9) DEPOT MAINT. ALW. PER 100 EQUIP.	(10) ILLUSTRATIONS (a) FIGURE NUMBER	(10) ILLUSTRATIONS (b) ITEM OR SYMBOL NUMBER
			6625-224-5174								BATTERY TESTERS TS-183/U, TS-183A/U AND TS-183B/U: For checking terminal voltages of dry batteries; uses a multirange voltmeter, a set of load resistors, a set of multiplier resistors and a jack-switching arrangement that gives a total of 32 different load resistor combinations. NOTE: Battery Tester TS-183/U will be replaced as a complete unit. No maintenance parts are authorized and therefore an identification table of parts for this unit is not included in this RPSTL. (This item is nonexpendable) NOTE: Model column 1 refers to TS-183A/U; column 2 refers to TS-183A/U																	1-1 1-2	
P	H		5935-192-4729	*	*						JACK JJ-033	ea		32				*	2	2	30	46	1-3 1-4	J1 thru J32
P	H		6625-275-5861	*							METER, VOLTMETER DC	ea		1				*	*	*	2	5	1-3	M1
P	H		6625-892-5551		*						METER, VOLTMETER DC	ea		1				*	*	*	2	5	1-4	M1
P	H		5935-192-4753	*	*						PLUG PJ-068 (Selector plug)	ea		1				*	*	*	2	5	1-3 1-4	P1
P	O		6625-194-2926	*	*						PROD, TEST: Black; SC-B-86017-1	ea		1	*	*	*	*	*	*	2	5	1-3 1-4	
P	O		6625-194-2925	*	*						PROD, TEST: Red; SC-B-86017-2	ea		1	*	*	*	*	*	*	2	5	1-3 1-4	

(1) SOURCE CD (1)	MAINT. CD (2)	REC. CODE (3)	(2) FEDERAL STOCK NUMBER	MODEL 1	2	3	4	5	6	IND CD	(3) DESCRIPTION	(4) UNIT OF ISSUE	(5) QTY INC IN UN PK	(6) QTY INC IN UNIT	(7) 30 DAY MAINT. ALW. DS (A) 1–20	(B) 21–50	(C) 51–100	GS (A) 1–20	(B) 21–50	(C) 51–100	(8) 1 YR. ALW. PER 100 EQUIP. CNTGCY PL.	(9) DEPOT MAINT. ALW. PER 100 EQUIP.	(10) ILLUSTRATIONS (A) FIGURE NUMBER	(B) ITEM OR SYMBOL NUMBER
											TS-183/U, 183A/U, 183B/U (continued)													
P	H		5905-191-5000	*	*						RESISTOR, FIXED, WIREWOUND: 2 ohm ±1%; 10 w; MIL type RW31G2R0	ea		1				*	*	*	2	5	4-3 4-4	R1
P	H		5905-264-8782	*	*						RESISTOR, FIXED, WIREWOUND: 4 ohm ±1%; 10 w; MIL type RW31G4R0	ea		1				*	*	*	2	5	4-3 4-4	R2
P	H		5905-843-2633	*	*						RESISTOR, FIXED, WIREWOUND: 6 ohm ±10%; 10 w; MIL type MIL type RW31V6R2	ea		1				*	*	*	2	5	4-3 4-4	R3
P	H		5905-258-0013	*	*						RESISTOR, FIXED, WIREWOUND: 8 ohm ±1%; 10 w; MIL type RW31G8R0	ea		I				*	*	*	2	5	4-3 4-4	R4
P	H		5905-173-8784	*	*						RESISTOR, FIXED, WIREWOUND: 12 ohm ±1%; 10 w; MIL type RW31G120	ea		1				*	*	*	2	5	4-3 4-4	R5
P	H		5905-199-0068	*	*						RESISTOR, FIXED, WIREWOUND: 20 ohm ±1%; 10 w; MIL type RW31G200	ea		1				*	*	*	2	5	4-3 4-4	R6
P	H		5905-188-5318	*	*						RESISTOR, FIXED, WIREWOUND: 35 ohm ±1%; 10 w; MIL type RW31G350	ea		1				*	*	*	2	5	4-3 4-4	R7
P	H		5905-264-8785	*	*						RESISTOR, FIXED, WIREWOUND: 40 ohm ±1%; 10 w	ea		1				*	*	*	2	5	4-3 4-4	R8
P	H		5905-642-1206	*	*						RESISTOR, FIXED, WIREWOUND: 50 ohm ±1%; 10 w; MIL type RW31V500	ea		1				*	*	*	2	5	4-3 4-4	R9

(1) Source Cd (a)	Maint. Cd (b)	Rec. Code (c)	(2) Federal Stock Number	Model 1	Model 2	Model 3	Model 4	Model 5	Model 6	Ind Cd	(3) Description	(4) Unit of Issue	(5) Qty Inc in Unpk	(6) Qty Inc in Unit	(7) 30 Day Maint. Alw. DS (a) 1–20	DS (b) 21–50	DS (c) 51–100	GS (a) 1–20	GS (b) 21–50	GS (c) 51–100	(8) 1 Yr. Alw. per 100 Equip. Cntgcy Fac	(9) Depot Maint. Alw. per 100 Equip.	(10) Illustrations (a) Figure Number	(10) Illustrations (b) Item or Symbol Number
											TS-183/U, 183A/U and 183B/U (continued)													
P	H		5905-157-0890	*	*						RESISTOR, FIXED, WIREWOUND: 100 ohm ±1%; 10 w; MIL type RW31G101	ea		1				*	*	*	2	5	4-3 4-4	R10
P	H		5905-644-8033	*	*						RESISTOR, FIXED, WIREWOUND: 300 ohm ±1%; 10 w; MIL type RW31G301	ea		1				*	*	*	2	5	4-3 4-4	R11
P	H		5905-666-3776	*	*						RESISTOR, FIXED, WIREWOUND: 550 ohm ±1%; 10 w; MIL type RW31V561	ea		1				*	*	*	2	5	4-3 4-4	R12
P	H		5905-843-2050	*	*						RESISTOR, FIXED, WIREWOUND: 860 ohm ±5%; 10 w; MIL type RW31V821	ea		1				*	*	*	2	5	4-3 4-4	R15
P	H		5905-642-1971	*	*						RESISTOR, FIXED, WIREWOUND: 1000 ohm ±5%; 10 w; MIL type RW31G102	ea		1				*	*	*	2	5	4-3 4-4	R16
P	H		5905-192-9042	*	*						RESISTOR, FIXED, WIREWOUND: 1300 ohm ±5%; 10 w MIL type RW31G132	ea		1				*	*	*	2	5	4-3 4-4	R17
P	H		5905-100-6795	*	*						RESISTOR, FIXED, WIREWOUND: 2000 ohm ±5%; 10 w; MIL type RW31G202	ea		1				*	*	*	2	5	4-3 4-4	R18
P	H		5905-191-9075	*	*						RESISTOR, FIXED, WIREWOUND: 3100 ohm ±5%; 12 w; MIL type RW32G312	ea		1				*	*	*	2	5	4-3 4-4	R19
P	H		5905-196-8713	*	*						RESISTOR, FIXED, WIREWOUND: 3500 ohm ±5%; 12 w; MIL type RW32G352	ea		1				*	*	*	2	5	4-3 4-4	R20

(1) SOURCE CD	MAINT. CD	REC. CODE	(2) FEDERAL STOCK NUMBER	MODEL 1	2	3	4	5	6	IND CD	(3) DESCRIPTION	(4) UNIT OF ISSUE	(5) QTY INC IN UN PK	(6) QTY INC IN UNIT	(7) 30 DAY MAINT. ALW. DS (a) 1–20	(b) 21–50	(c) 51–100	GS (a) 1–20	(b) 21–50	(c) 51–100	(8) 1 YR. ALW. PER 100 EQUIP. CNTGCY	(9) DEPOT MAINT. ALW. PER 100 EQUIP.	(10) ILLUSTRATIONS (a) FIGURE NUMBER	(b) ITEM OR SYMBOL NUMBER
											TS-183/U, 183A/U, 183B/U (continued)													
P	H		5905-795-0424	*	*						RESISTOR, FIXED, WIREWOUND: 5000 ohm ±5%; 18 w; MIL type RW33G02	ea		1				*	*	*	2	5	4-3 4-4	R21
P	H		5905-188-5316	*	*						RESISTOR, FIXED, WIREWOUND: 7500 ohm ±5%; 24 w; MIL type RW33G02	ea		1				*	*	*	2	5	4-3 4-4	R22
P	H		5905-583-8157	*	*						RESISTOR, FIXED, WIREWOUND: 9000 ohm ±5%; 30 w; MIL type RW35G02	ea		1				*	*	*	2	5	4-3 4-4	R23
P	H		5905-299-2030	*	*						RESISTOR, FIXED, COMPOSITION: 12,000 ohm ±5%; 1 w; MIL type RC32GF123J	ea		1				*	*	*	2	5	4-3 4-4	R24
P	H		5905-299-2028	*	*						RESISTOR, FIXED, COMPOSITION: 15,000 ohm ±5%; 1 w; MIL type RC32GF153J	ea		1				*	*	*	2	5	4-3 4-4	R25
P	H		5905-299-2017	*	*						RESISTOR, FIXED, COMPOSITION: 30,000 ohm ±5%; 1 w; MIL type RC32GF303J	ea		1				*	*	*	2	5	4-3 4-4	R13
P	H		5905-299-2015	*	*						RESISTOR, FIXED, COMPOSITION: 39,000 ohm ±5%; 1 w; MIL type RC32GF39J	ea		1				*	*	*	2	5	4-3 4-4	R14
P	H		5905-120-0167	*	*						RESISTOR, FIXED, COMPOSITION: 51,000 ohm ±5%; 1 w; MIL type RC32GF513J	ea		1				*	*	*	2	5	4-3 4-4	R26
P	H		5930-050-2681	*	*						SWITCH, TOGGLE: ST42B; SPST	ea		1				*	*	*	2	5	4-3 4-4	S1

INDEX — FEDERAL STOCK NUMBER CROSS REFERENCE TO FIGURE AND ITEM NUMBER OR REFERENCE SYMBOL

STOCK NO.	FIGURE NO.	ITEM NO. REF. SYMBOL
5905-100-6795	4-3 4-4	R18
5905-120-0167	4-3 4-4	R26
5905-157-0850	4-3 4-4	R10
5905-173-8784	4-3 4-4	R5
5905-188-5316	4-3 4-4	R22
5905-188-5318	4-3 4-4	R7
5905-191-5000	4-3 4-4	R1
5905-191-5075	4-3 4-4	R19
5905-192-9042	4-3 4-4	R17
5905-196-2713	4-3 4-4	R20
5905-199-0068	4-3 4-4	R6
5905-258-0013	4-3 4-4	R4
5905-264-8782	4-3 4-4	R2
5905-264-8782	4-3 4-4	R3
5905-299-2015	4-3 4-4	R14
5905-299-2017	4-3 4-4	R13
5905-299-2028	4-3 4-4	R25
5905-299-2030	4-3 4-4	R24
5905-583-8157	4-3 4-4	R23
5905-642-1206	4-3 4-4	R9
5905-642-1971	4-3 4-4	R16
5905-644-8033	4-3 4-4	R11
5905-666-3776	4-3 4-4	R12
5905-795-0424	4-3 4-4	R21
5905-843-2030	4-3 4-4	R15
5905-843-2633	4-3 4-4	R8
5930-050-2681	4-3 4-4	S1
5935-192-4729	1-3 1-4	J1 thru J32
5935-192-4753	1-3 1-4	P1
6625-255-5861	1-3	M1
6625-892-9551	1-4	M1

By Order of the Secretary of the Army:

HAROLD K. JOHNSON,
General, United States Army,
Chief of Staff.

Official:
KENNETH G. WICKHAM,
Major General, United States Army,
The Adjutant General.

Distribution:

Active Army:

CNGB (1)
CC-E (7)
Dir of Trans (1)
CofEngrs (1)
TSG (1)
CofSptS (1)
USAARENBD (2)
USAAESWBD (5)
USA Arty Bd (2)
USACDCEA (1)
USACDCCBRA (1)
USACDCCEA (1)
USACDCCEA
(Ft Huachuca) (1)
USACDCOA (1)
USACDCQMA (1)
USACDCTA (1)
USACDCADA (1)
USACDCARMA (1)
USACDCAVNA (1)
USACDCARTYA (1)
USACDCSWA (1)
USCONARC (5)
USAMC (5)
USASA (2)
USAMICOM (4)
USASTRATCOM (4)
USASTRATCOM-
CONUS (5)
USAESC (70)
USACDCEC (10)
USAINTC (5)
ARADCOM (5)
ARADCOM Rgn (2)
OS Maj Comd (4) except
USARHAW (5)
USARJ (5)
USARYIS (5)
LOGCOMD (2)
MDW (1)
Armies (2) except
Eighth US Army (5)
Corps (2)
USAC (3)
52nd USASA Sp Op Cmd (5)
507th USASA Gp (5)
508th USASA Gp (5)
318th USASA Bn (5)
319th USASA Bn (5)
75th USASA Co (5)
177th USASA Co (5)
182nd USASA Co (5)
183rd USASA Co (5)
184th USASA Co (5)
Svc Colleges (2)
USMA (20)
AFIP (15)
USASCS (15)
USASESCS (20)
USAADS (20)
USAAMS (20)
USAARMS (20)
USAIS (20)
USAES (2)
USAAVNS (20)
MFSS (20)
USATSCH (20)
USACMLCS (15)
Instl (2) except
Ft Hancock (4)
Ft Gordon (10)
Ft Huachuca (10)
Ft Carson (25)
Ft Knox (12)
Ft Ritchie (5)
Ft Lee (5)
Ft Belvoir (5)
Ft Monroe (5)
WSMR (5)
Army Dep (2) except
LBAD (14)
SAAD (30)
TOAD (14)
LEAD (7)
SHAD (3)
NAAD (5)
SVAD (5)
CHAD (3)
ATAD (10)
PUAD (3)
UMAD (3)
Gen Dep (2)
Sig Sec, Gen Dep (5)
Sig Dep (12)
USATC Armor (2)
USATC Engr (2)
USATC Inf (2)
USASTC (2)
WRAMC (1)
Army Pic Cen (2)
USAECFB (5)
USAMEDTC (5)
USAEPG (5)
APG (5)
Edgewood Arsenal (5)
Redstone Arsenal (5)
USAARMHRU (5)
USAINFHRU (5)
USAAVNHRU (5)
LGH (5)
Sig FLDMS (2)
AMS (1)
USAERDAA (2)
USAERDAW (13)
USACRREL (2)
MM Sig Spt Fac (5)
Units org under fol TOE:
11-57 (2)
11-97 (2)
11-98 (2)
11-117 (2)
11-127 (2)
11-155 (2)
11-157 (2)
11-158 (2)
11-500 (AA-AC) (KA,KB)
(2)
11-587 (2)
11-592 (2)
11-597 (2)
10-500(AA-AC,LB-LF) (2)
32-57 (2)
32-57 (2)
32-500 (2)

NG: State AG (3).
USAR: None.
For explanation of abbreviations used, see AR 320-50.

*U.S. GOVERNMENT PRINTING OFFICE: 1988—201-421/80065

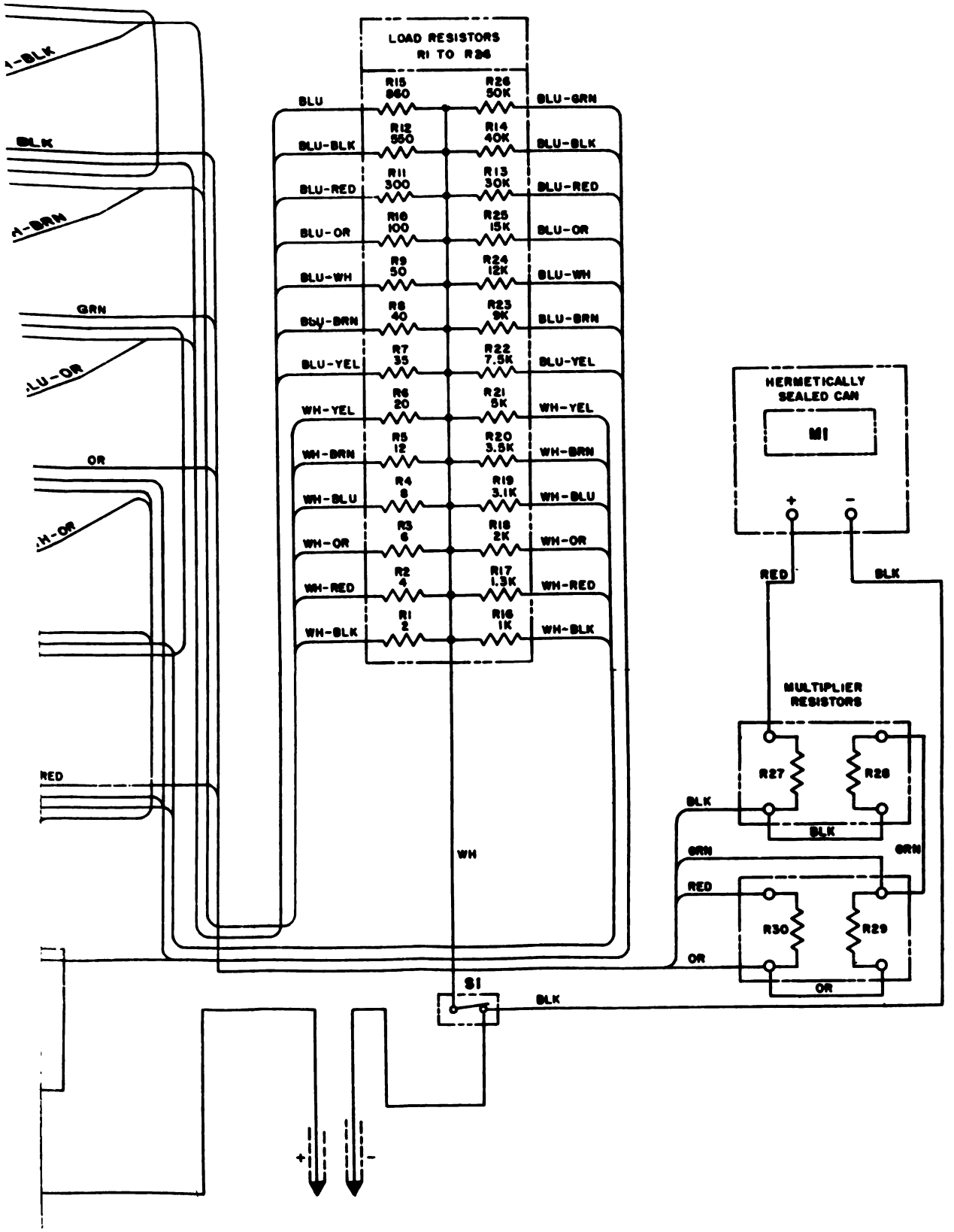

ure 7-2. *Battery Tester TS-183/U, wiring diagram.*

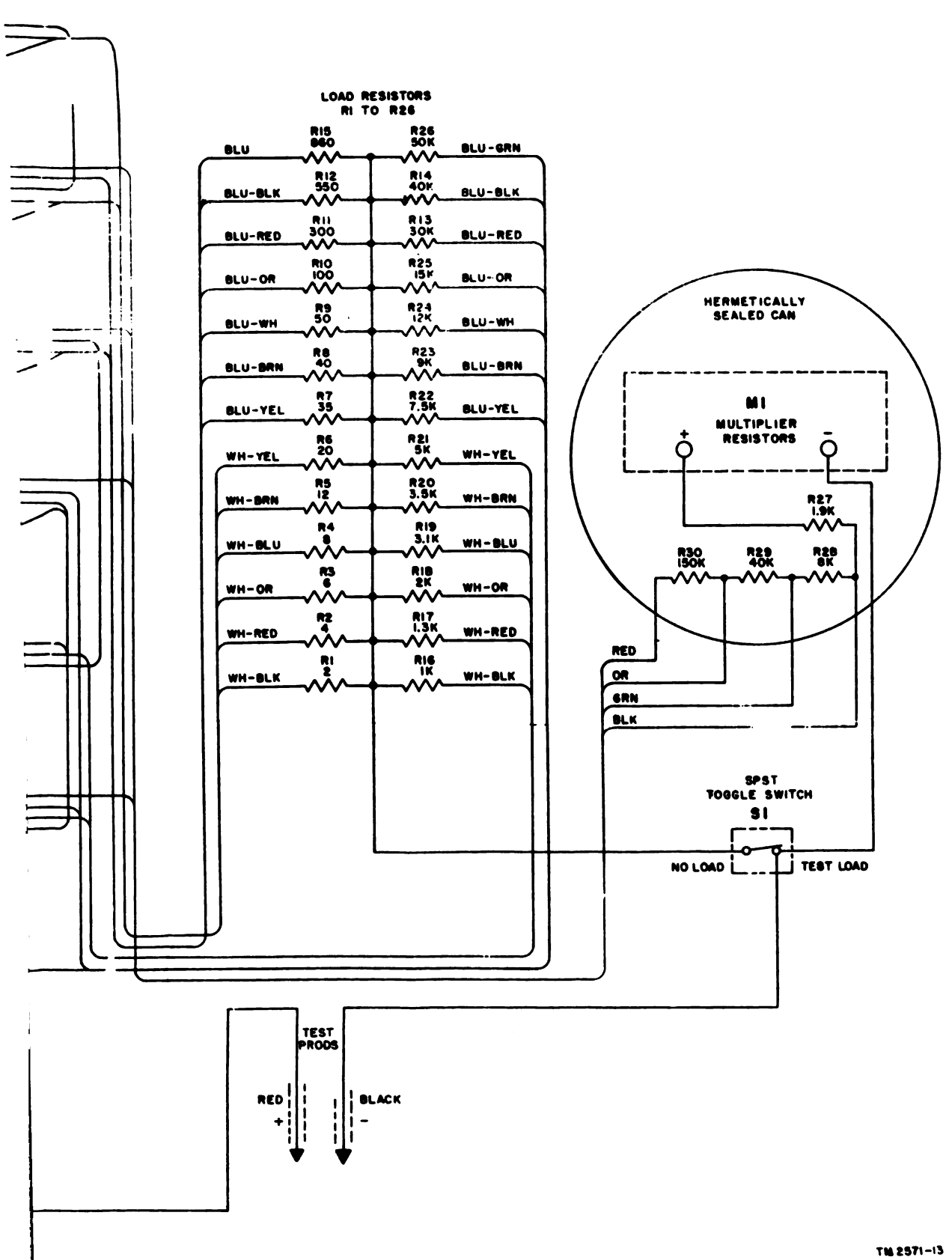

Battery Tester TS-18A/U, wiring diagram.

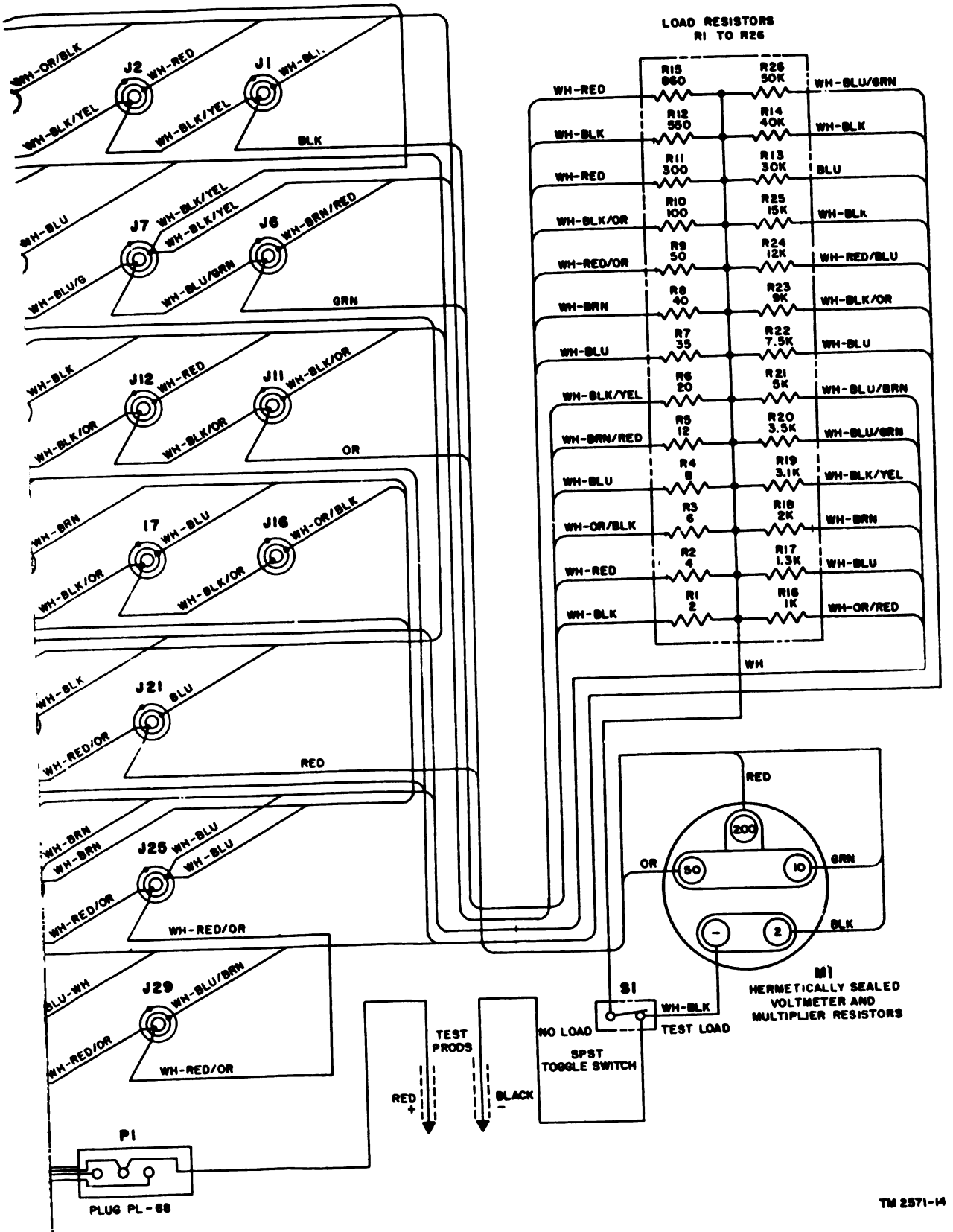

Figure 7-4. Battery Tester TS-183B/U, wiring diagram.